2012 VULCAN® 1700 VAQUERO® PARTS DIAGRAM

Crankcase Bolt Pattern

E1412

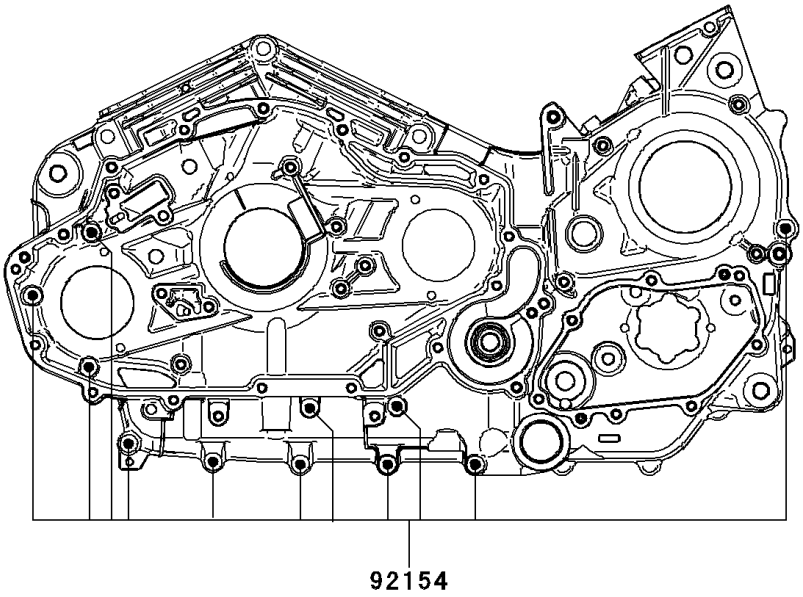

LH(Out Side)

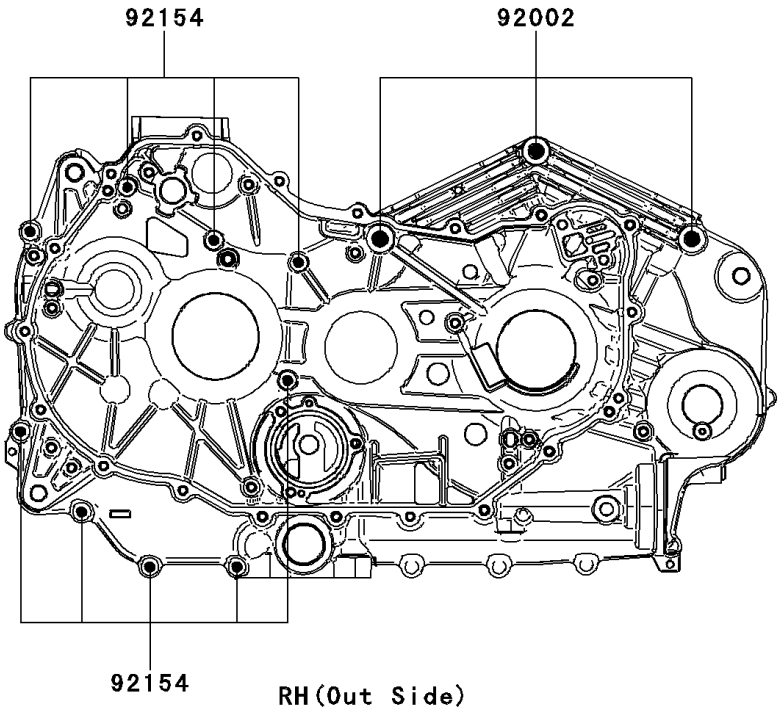

RH(Out Side)

© 2024 Kawasaki Motors Corp., U.S.A.

2012 VULCAN® 1700 VAQUERO® PARTS LIST

Crankcase Bolt Pattern

ITEM NAME	PART NUMBER	QUANTITY
BOLT,FLANGED,10X190 (Ref # 92002)	92002-1548	3
BOLT,FLANGED-SMALL,6X90 (Ref # 92154)	92154-0132	20

© 2024 Kawasaki Motors Corp., U.S.A.