2015 KLX®140L PARTS DIAGRAM

Front Brake

F2292

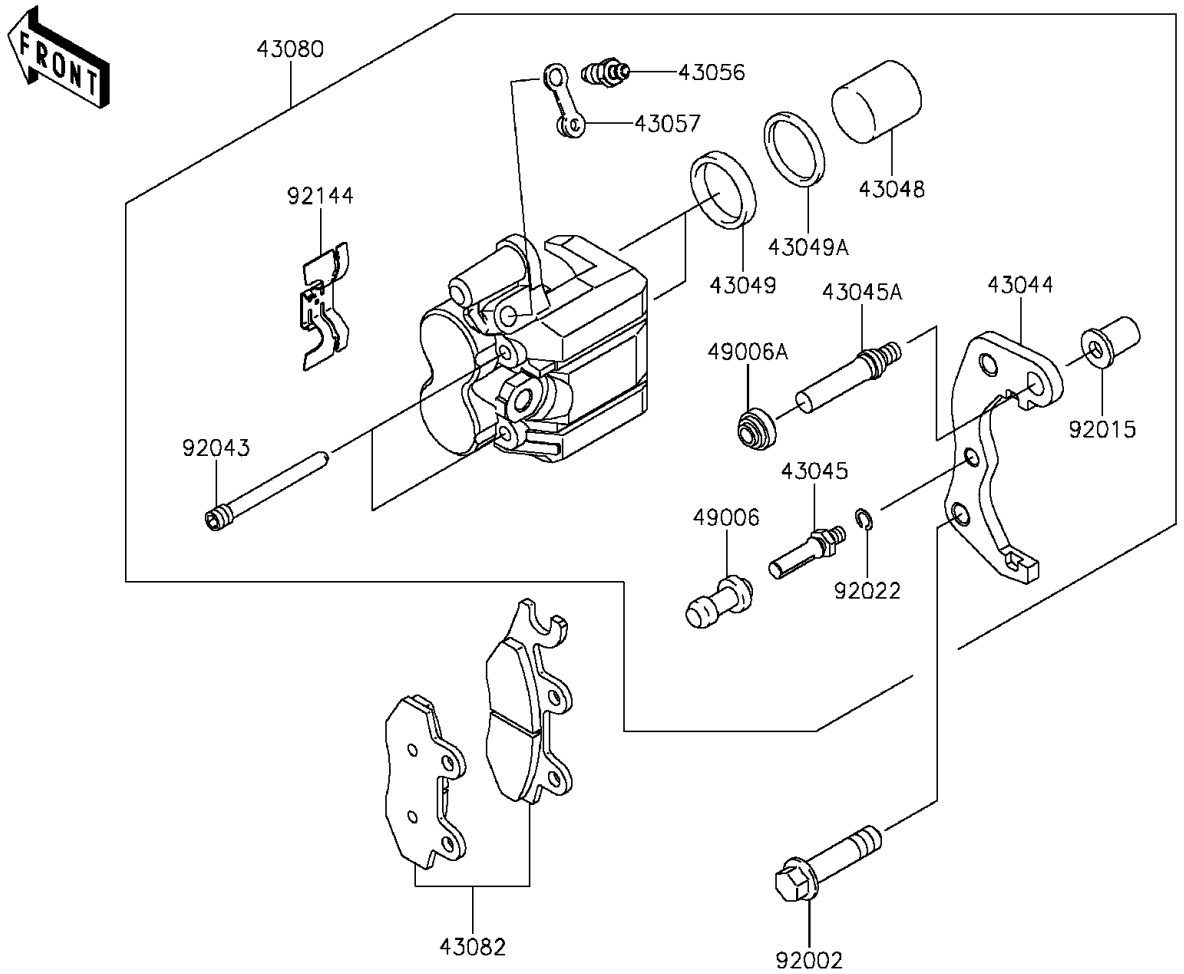

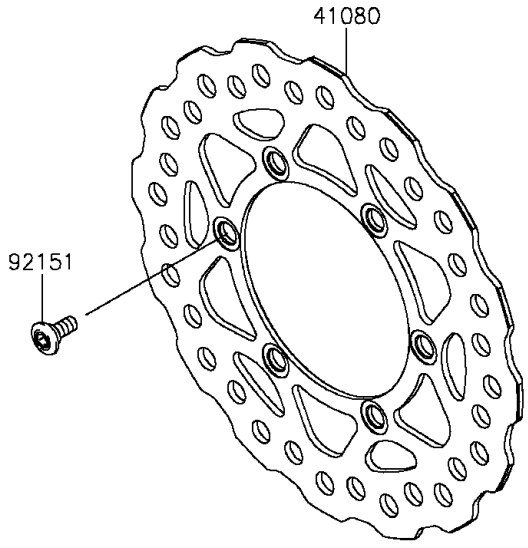

© 2024 Kawasaki Motors Corp., U.S.A.

2015 KLX®140L PARTS LIST

Front Brake

ITEM NAME	PART NUMBER	QUANTITY
DISC,FR (Ref # 41080)	41080-0118	1
HOLDER-COMP-CALIPER,FR,LH (Ref # 43044)	43044-0006	1
SHAFT-CALIPER (Ref # 43045)	43045-1010	1
SHAFT-CALIPER (Ref # 43045A)	43045-1052	1
PISTON-CALIPER (Ref # 43048)	43048-0010	2
PACKING,PISTON SEAL (Ref # 43049)	43049-1060	2
PACKING,PISTON SEAL (Ref # 43049A)	43049-1061	2
BREATHER-BRAKE (Ref # 43056)	43056-0004	1
CAP-BREATHER (Ref # 43057)	43057-1001	1
CALIPER-SUB-ASSY,FR (Ref # 43080)	43080-0052	1
PAD-ASSY-BRAKE (Ref # 43082)	43082-0075	1
BOOT,CALIPER (Ref # 49006)	49006-1088	1
BOOT,CALIPER (Ref # 49006A)	49006-1242	1
BOLT,FLANGED,10X41 (Ref # 92002)	92002-1468	2
NUT (Ref # 92015)	92015-1740	1
WASHER,WAVE (Ref # 92022)	92022-1373	1
PIN,HANGER (Ref # 92043)	92043-1416	2
SPRING,PAD (Ref # 92144)	92144-1847	1
BOLT,DISC PLATE,6MM (Ref # 92151)	92151-1799	6

© 2024 Kawasaki Motors Corp., U.S.A.