1982 KX125 PARTS DIAGRAM

GEAR CHANGE MECHANISM

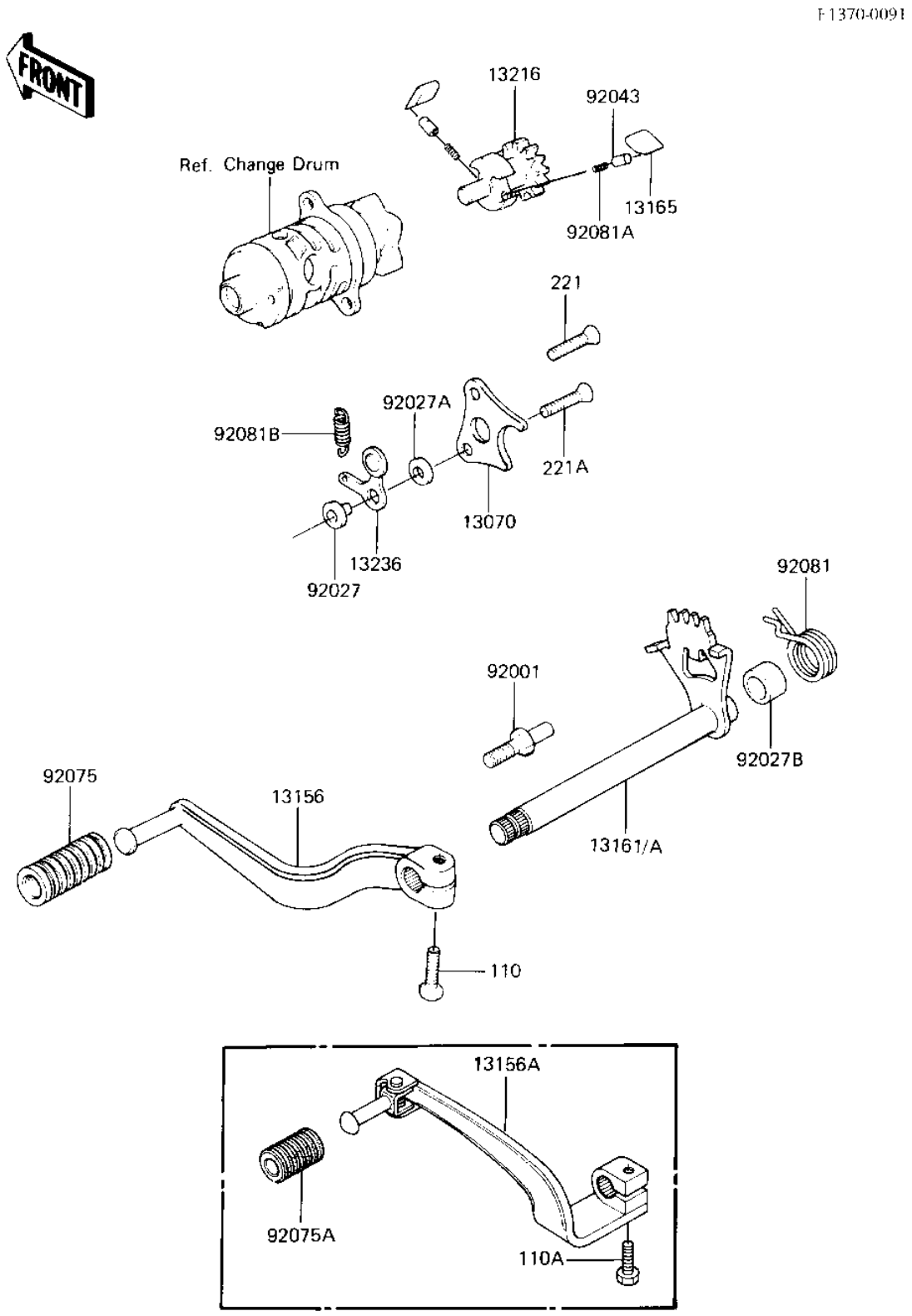

© 2024 Kawasaki Motors Corp., U.S.A.

1982 KX125 PARTS LIST

GEAR CHANGE MECHANISM

ITEM NAME	PART NUMBER	QUANTITY
GUIDE,RATCHET (Ref # 13070)	13070-1049	1
LEVER-CHANGE,PEDAL (Ref # 13156)	13156-1056	1
LEVER-COMP-CHANGE SHA (Ref # 13161)	13161-1030	1
PAWL,RATCHET (Ref # 13165)	13165-1026	2
RATCHET,CHANGE DRUM (Ref # 13216)	13216-1020	1
LEVER-COMP,CHANGE DRU (Ref # 13236)	13236-1040	1
BOLT,RETURN SPRING (Ref # 92001)	92001-1401	1
COLLAR (Ref # 92027)	92027-1248	1
COLLAR,6X14X2.5 (Ref # 92027A)	92027-1509	1
COLLAR (Ref # 92027B)	92027-189	1
PIN (Ref # 92043)	92043-1067	2
DAMPER,CHANGE PEDAL (Ref # 92075)	92160-1108	1
SPRING,TENTION (Ref # 92081)	92081-1129	1
SPRING,RATCHET PAWL (Ref # 92081A)	92081-1201	2
SPRING,CHNG DRUM LEV (Ref # 92081B)	92083-012	1
BOLT-UPSET,6X20 (Ref # 110)	112G0620	1
SCREW CNTSNK HD 6X16 (Ref # 221)	221B0616	1
SCREW-CSK-CROS,6X22 (Ref # 221A)	221B0622	1

© 2024 Kawasaki Motors Corp., U.S.A.