2002 1100 STX D.I. PARTS DIAGRAM

Crankcase

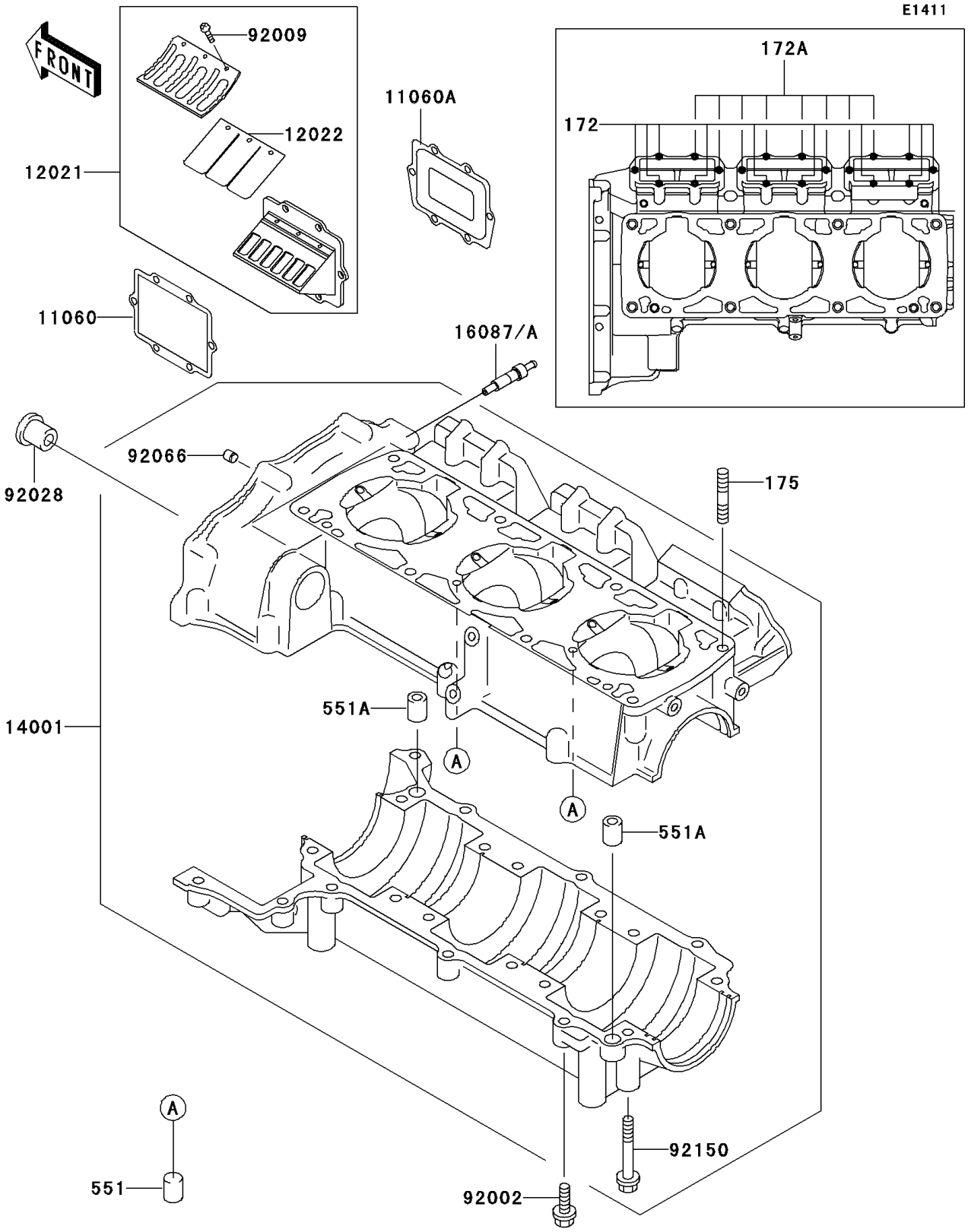

© 2025 Kawasaki Motors Corp., U.S.A.

2002 1100 STX D.I. PARTS LIST

Crankcase

ITEM NAME	PART NUMBER	QUANTITY
BOLT-STUD (Ref # 172)	172R0620	10
BOLT-STUD (Ref # 172A)	172R0630	8
BOLT-STUD-FINE (Ref # 175)	175R1035	8
PIN-DOWEL (Ref # 551)	551R0612	2
PIN-DOWEL (Ref # 551A)	551R1012	2
GASKET,REED VALVE (Ref # 11060)	11060-3717	3
GASKET,REED VALVE (Ref # 11060A)	11060-3757	3
VALVE-ASSY-REED (Ref # 12021)	12021-3713	3
VALVE-REED (Ref # 12022)	12022-3711	6
SET-CRANKCASE (Ref # 14001)	14001-5380	1
VALVE-CHECK (Ref # 16087A)	16087-3712	1
BOLT,6X30 (Ref # 92002)	92002-3726	9
SCREW,REED VALVE (Ref # 92009)	92009-1014	18
BUSHING (Ref # 92028)	92028-3718	1
PLUG (Ref # 92066)	92066-1213	1
BOLT,8X65 (Ref # 92150)	92150-3708	12

© 2025 Kawasaki Motors Corp., U.S.A.