1982 CSR Twin PARTS DIAGRAM

BREATHER COVER/OIL PLAN

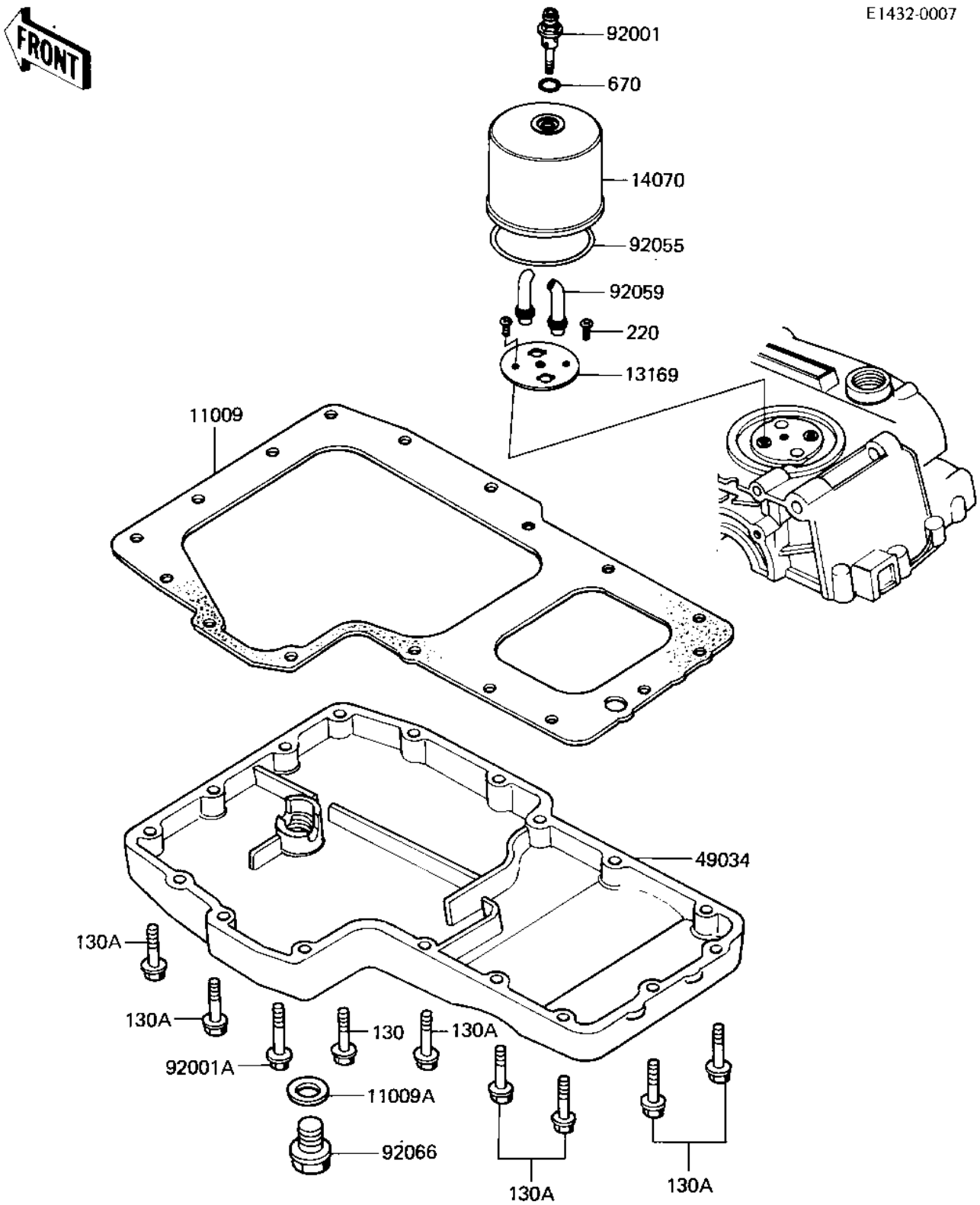

© 2024 Kawasaki Motors Corp., U.S.A.

1982 CSR Twin PARTS LIST

BREATHER COVER/OIL PLAN

ITEM NAME	PART NUMBER	QUANTITY
GASKET,OIL PAN (Ref # 11009)	16112-004	1
GASKET,DRIN PLUG (Ref # 11009A)	92065-097	1
PLATE,BREATHER (Ref # 13169)	14068-007	1
BODY,BREATHER (Ref # 14070)	14070-007	1
PAN-OIL (Ref # 49034)	49034-1013	1
BOLT,BREATHER FITTIN (Ref # 92001)	92003-098	1
BOLT, HEX HEAD, 6X34 (Ref # 92001A)	92003-159	1
"O" RING,91MM (Ref # 92055)	92055-052	1
TUBE,BREATHER (Ref # 92059)	92059-140	2
PLUG,OIL DRAIN,12X15 (Ref # 92066)	92066-1174	1
UNAVAILABLE IN PRICE BOOK (Ref # 130)	130G062	1
BOLT,FLANGED,6X25 (Ref # 130A)	130G0625	15
SCREW PAN HEAD 6X18 (Ref # 220)	220B0618	2
"0" RING,16MM (Ref # 670)	670B2016	1

© 2024 Kawasaki Motors Corp., U.S.A.