1982 KDX250 PARTS DIAGRAM

MUFFLER ('82 KDX250-B2)

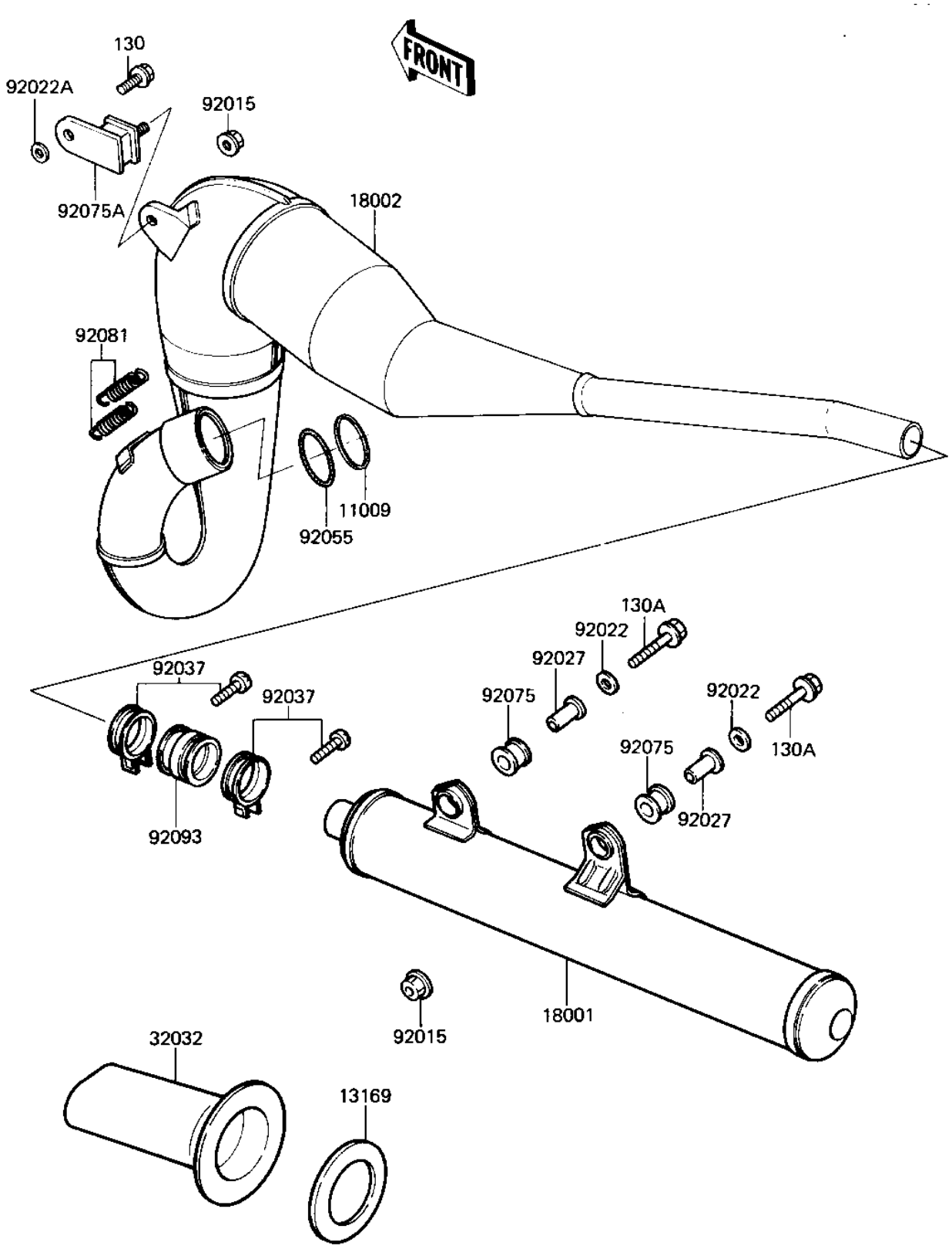

R N
11
13
18
18
32
92
92
92
92
92
92
92
92
92
92

© 2024 Kawasaki Motors Corp., U.S.A.

1982 KDX250 PARTS LIST

MUFFLER ('82 KDX250-B2)

ITEM NAME	PART NUMBER	QUANTITY
GASKET,EXHAUST PIPE (Ref # 11009)	11009-1253	1
CHOKE PLATE (Ref # 13169)	13169-4008	1
MUFFLER (Ref # 18001)	18001-1363	1
BODY-COMP-MUFFLER (Ref # 18002)	18002-1200	1
CHOKE PIPE (Ref # 32032)	32032-4015	1
NUT-6MM (Ref # 92015)	92015-1078	1
WASHER,PLAIN (Ref # 92022)	92022-298	2
WASHER,PLAIN (Ref # 92022A)	92022-312	1
COLLAR,FUEL TANK FITT (Ref # 92027)	92027-1134	2
CLAMP,MUFFLER (Ref # 92037)	92037-177	2
"0" RING,55MM,MUFFLER (Ref # 92055)	92055-1057	1
DAMPER,MUFFLER (Ref # 92075)	92075-1196	2
DAMPER,MUFFLER (Ref # 92075A)	92075-1891	1
SPRING,MUFFLER (Ref # 92081)	92081-1452	3
DUST SHIELD,MUFFLER (Ref # 92093)	92093-1014	1
BOLT,FLANGED,6X12 (Ref # 130)	130G0612	1
BOLT,FLANGED,8X30 (Ref # 130A)	130G0830	2

© 2024 Kawasaki Motors Corp., U.S.A.