1985 JS550

PARTS DIAGRAM

CRANKSHAFT/PISTONS

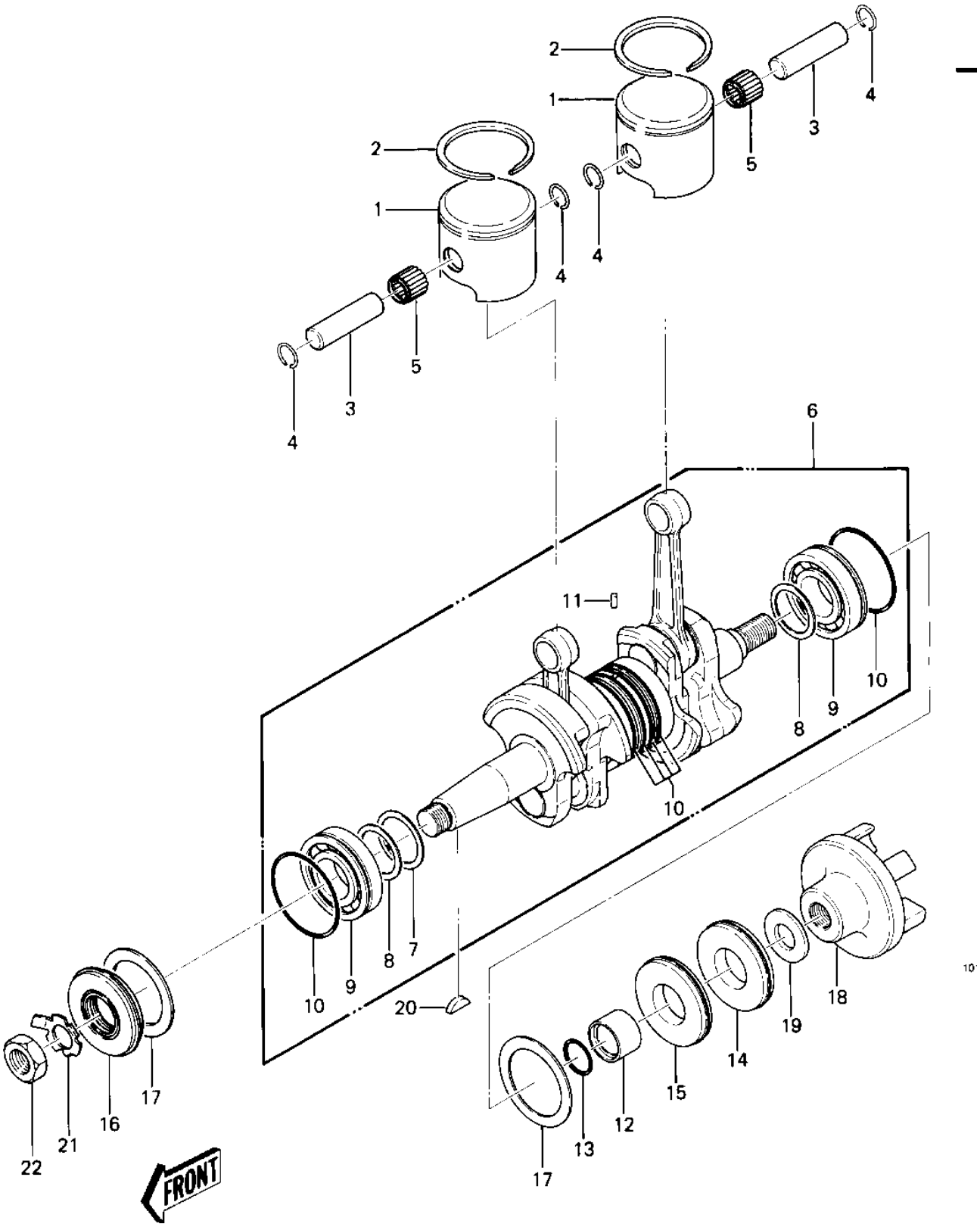

© 2026 Kawasaki Motors Corp., U.S.A.

1985 JS550

PARTS LIST

CRANKSHAFT/PISTONS

Kawasaki
Let the Good Times Roll®

ITEM NAME	PART NUMBER	QUANTITY
PISTON-ENGINE,STD (Ref # 1)	13001-3023	2
PISTON,0.50MM,Q.S. (Ref # 1)	13029-3004	(2
RING-PISTON,STD (Ref # 2)	13003-3019	2
RING-PISTON,O/S 0.50 (Ref # 2)	13003-3020	(2
PIN-PISTON (Ref # 3)	13002-504	2
CIRCLIP PISTON PIN (Ref # 4)	92036-004	4
BEARING-SMALL END (Ref # 5)	13033-3005	2
CRANKSHAFT ASSY, (Ref # 6)	13031-3011	1
SHIM-1.0T (Ref # 7)	92025-532	1
SHIM 0.1T (Ref # 8)	92025-513	AR
SHIM 0.2T (Ref # 8)	92025-518	AR
SHIM 0.3T (Ref # 8)	92025-523	AR
SHIM 0.4T (Ref # 8)	92025-527	AR
SHIM 0.5T (Ref # 8)	92025-530	AR
SHIM 0.6T (Ref # 8)	92025-533	AR
BEARING-BALL (Ref # 9)	92045-505	2
O-RING (Ref # 10)	92055-504	6
PIN,DOWEL (Ref # 11)	551A0410	1
SLEEVE,CRANKSHAFT OUT (Ref # 12)	42036-3007	1
"0" RING,CRANKSHAFT (Ref # 13)	92055-3009	1
SEAL-OIL,TCY306210 (Ref # 14)	92049-3005	1
SEAL-OIL,DCY30629 (Ref # 15)	92049-3006	1
SEAL,OIL TCY306210 (Ref # 16)	92050-507	1
WASHER (Ref # 17)	92022-3021	2
COUPLING (Ref # 18)	42034-3706	1
WASHER,18.5X38X4 (Ref # 19)	92022-3028	1
WOODRUFF KEY (Ref # 20)	510A5200	1
WASHER,LOCK,20M/M (Ref # 21)	92022-569	1
NUT,20M/M (Ref # 22)	92015-535	1

© 2026 Kawasaki Motors Corp., U.S.A.