1983 KE175 PARTS DIAGRAM

HEADLIGHT ('82-'83 KE175-D4/D5)

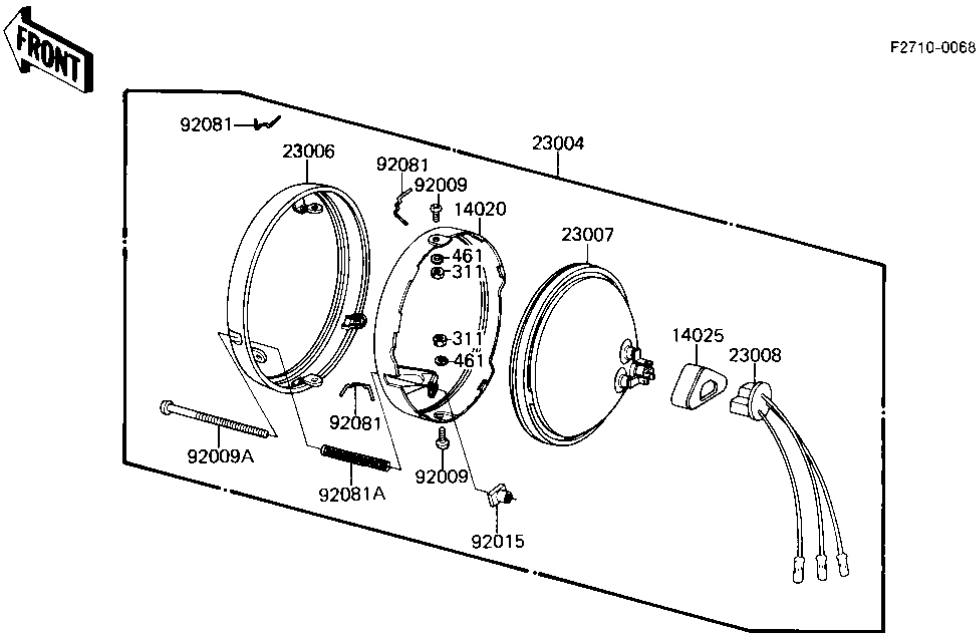

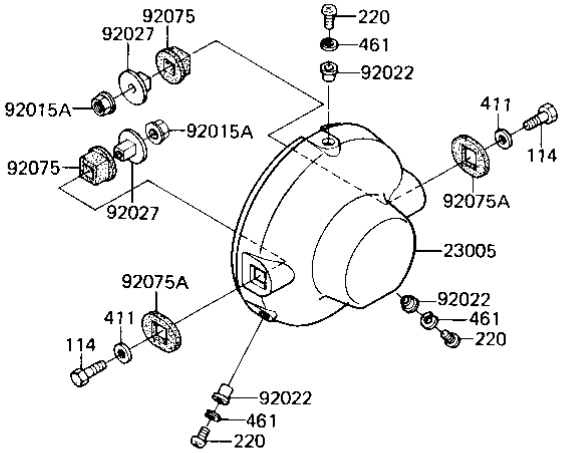

© 2024 Kawasaki Motors Corp., U.S.A.

1983 KE175 PARTS LIST

HEADLIGHT ('82-'83 KE175-D4/D5)

ITEM NAME	PART NUMBER	QUANTITY
RETAINER,SEALED BEAM (Ref # 14020)	23072-002	1
COVER,HD LAMP SOCKET (Ref # 14025)	23081-001	1
LAMP UNIT,HEAD (Ref # 23004)	23004-1018	1
BODY,HEAD LAMP,BLACK (Ref # 23005)	23005-1007-6Z	1
RIM,HEAD LAMP (Ref # 23006)	23006-1004	1
SEALED BEAM UNIT (Ref # 23007)	23007-073	1
SOCKET ASSY,HD LIGHT (Ref # 23008)	23008-044	1
SCREW,LENS FITTING (Ref # 92009)	23019-026	2
SCREW,FOCUS ADJUST (Ref # 92009A)	23019-027	1
NUT ADJUST (Ref # 92015)	23020-012	1
NUT,8M/M (Ref # 92015A)	92015-1014	2
WASHER (Ref # 92022)	23021-010	3
COLLAR,HEAD LAMP (Ref # 92027)	92027-1105	2
DAMPER RUBBER,HD LAMP (Ref # 92075)	92075-1077	2
DAMPER RUBBER,HD LAMP (Ref # 92075A)	92075-1078	2
CLAMP,HEAD LAMP LENS (Ref # 92081)	23009-015	3
SPRING,FOCUS ADJUST (Ref # 92081A)	23014-012	1
BOLT-SMALL,8X30 (Ref # 114)	114N0830	2
SCREW PAN HEAD 5X12 (Ref # 220)	220B0512	3
NUT,4MM (Ref # 311)	311B0400	2
WASHER,PLAIN,8MM (Ref # 411)	411D0800	2
WASHER SPRING 5MM (Ref # 461)	461F0500	5

© 2024 Kawasaki Motors Corp., U.S.A.