1976 Trial PARTS DIAGRAM

CYLINDER HEAD/CYLINDER

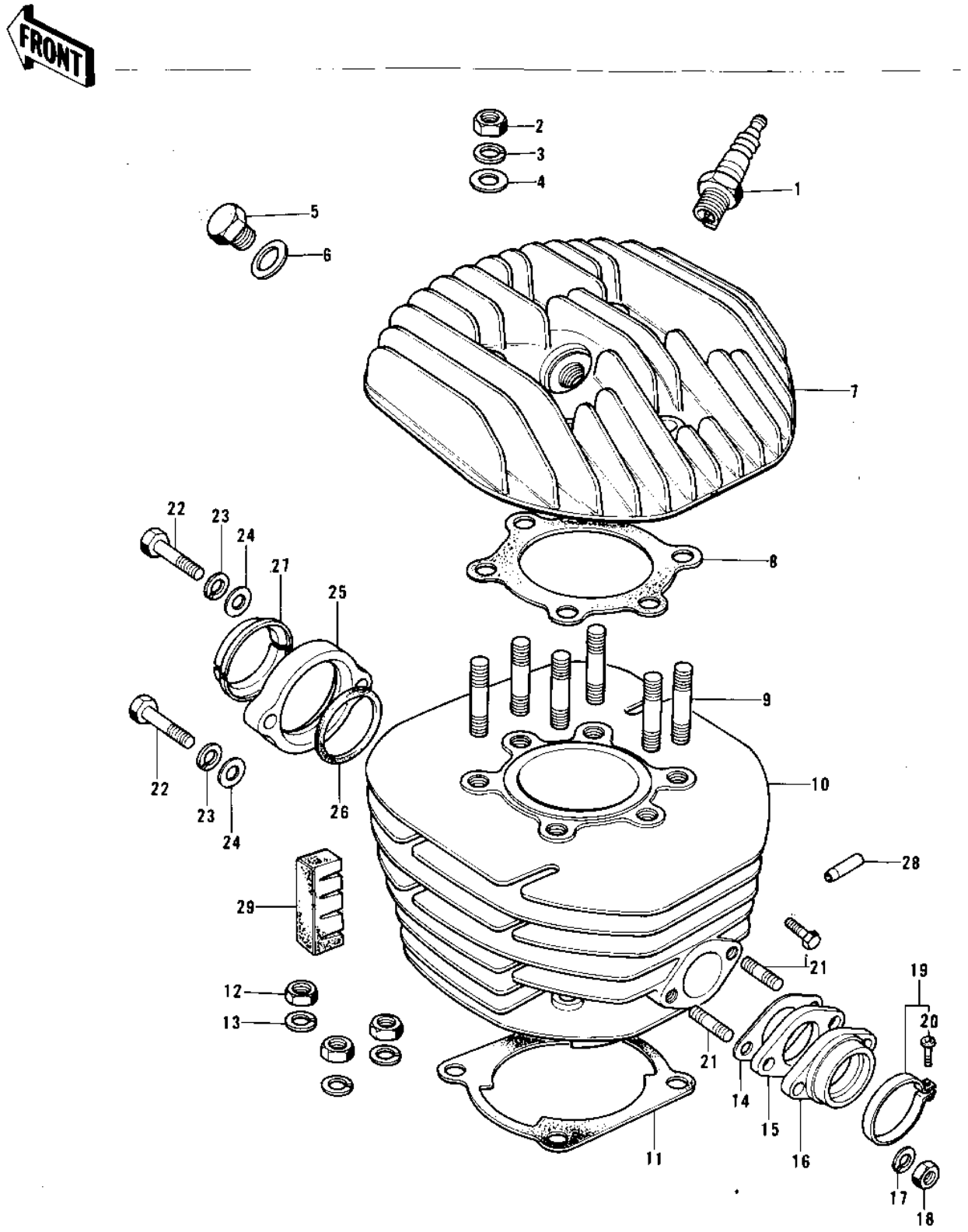

© 2024 Kawasaki Motors Corp., U.S.A.

1976 Trial PARTS LIST

CYLINDER HEAD/CYLINDER

ITEM NAME	PART NUMBER	QUANTITY
SPARK PLUG B7HS (Ref # 1)	B7HS	
NUT,8MM (Ref # 2)	311B0800	
WASHER SPRING 8MM (Ref # 3)	461F0800	
WASHER PLAIN 8MM (Ref # 4)	410B0800	
PLUG-CYLINDER HEAD (Ref # 5)	92067-005	
GASKET-CYL HEAD PLUG (Ref # 6)	92065-068	
CYLINDER HEAD,BUFF (Ref # 7)	11001-106-80	
GASKET,CYLINDER HEAD (Ref # 8)	11004-072	
STUD 8X40 (Ref # 9)	172G0840	
STUD,8X35 (Ref # 9)	92004-1009	
CYLINDER,BUFF (Ref # 10)	11005-151-80	
GASKET,CYLINDER BASE (Ref # 11)	11009-038	
NUT,10MM (Ref # 12)	317B1000	
WASHER SPRING 10MM (Ref # 13)	461F1000	
GASKET,AIR INLET (Ref # 14)	16062-019	
INSULATOR,HEAT (Ref # 15)	16061-017	
HOLDER,CARBURETOR (Ref # 16)	16065-031	
WASHER SPRING 8MM (Ref # 17)	461F0800	
NUT 8MM (Ref # 18)	318B0800	
CLAMP,HOLDER (Ref # 19)	92037-077	
SCREW-PAN-CROS,5X25 (Ref # 20)	220B0525	
STUD,8X16 (Ref # 21)	172G0816	
BOLT (Ref # 21)	120P0816	
BOLT,FLANGED,8X35 (Ref # 22)	92001-1577	
BOLT HEX HEAD 8X35 (Ref # 22)	116B0835	
WASHER SPRING 8MM (Ref # 23)	461F0800	
WASHER PLAIN 8MM (Ref # 24)	410B0800	
HOLDER,EXHAUST PIPE (Ref # 25)	18069-058	
GASKET,EX PIPE HOLDER (Ref # 26)	18050-009	

© 2024 Kawasaki Motors Corp., U.S.A.