1973 H1-D PARTS DIAGRAM

FRONT FORK (H1/A/C)

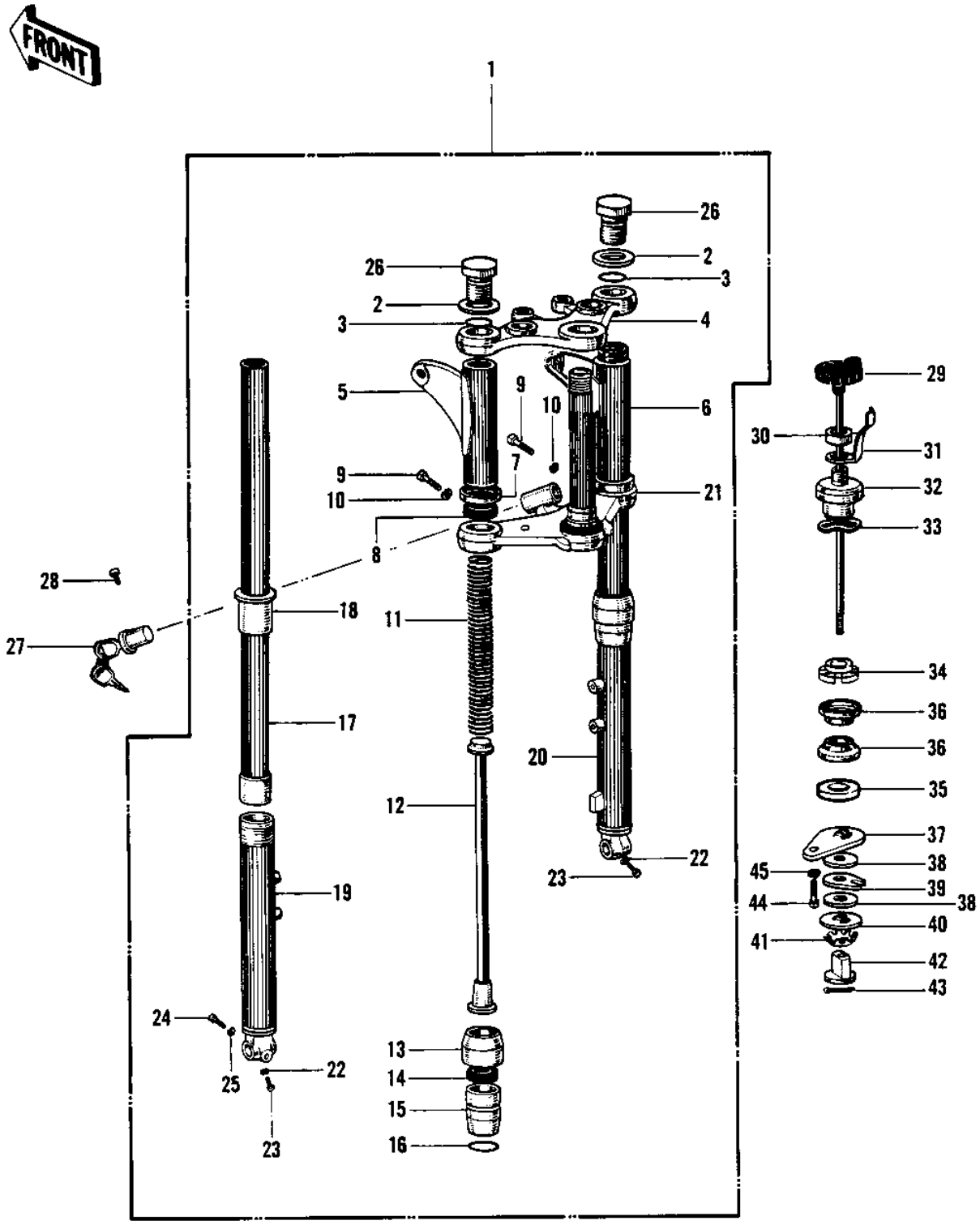

(H1/A

© 2024 Kawasaki Motors Corp., U.S.A.

1973 H1-D PARTS LIST

FRONT FORK (H1/A/C)

ITEM NAME	PART NUMBER	QUANTITY
FORK-FRONT,BLACK (Ref # 1)	44001-043-10	1
WASHER FORK TOP (Ref # 2)	44043-033	2
'O' RING FORK TOP (Ref # 3)	44046-015	2
HEAD STEERING STEM (Ref # 4)	44039-025	1
COVER-L.H FORK,BLACK (Ref # 5)	44033-024-10	1
COVER LH FORK-SILVER (Ref # 5)	44033-024-42	1
COVER-R.H FORK,BLACK (Ref # 6)	44034-023-10	1
COVER RH FORK-SILVER (Ref # 6)	44034-023-42	1
WASHER FORK COVER (Ref # 7)	44043-034	2
GASKET FORK COVER (Ref # 8)	44045-029	2
BOLT,HEX HEAD 10X35 (Ref # 9)	92001-1252	2
WASHER SPRING 10MM (Ref # 10)	461F1000	2
SPRING FORK (Ref # 11)	44026-022	2
SPRING-FORK (Ref # 11)	44026-031	2
HOLDER FORK SPRING (Ref # 12)	44028-015	2
DUST SHIELD (Ref # 13)	44010-017	2
OIL SEAL,FORK (Ref # 14)	44009-020	2
NUT FORK OUTER TUBE (Ref # 15)	44007-015	2
'O' RING OUTER TUBE (Ref # 16)	44046-016	2
TUBE-FORK INNER (Ref # 17)	44013-025	2
GUIDE FORK INNER TUBE (Ref # 18)	44015-011	2
TUBE,LH,FORK OUTER (Ref # 19)	44005-020	1
TUBE,RH,FORK OUTER (Ref # 20)	44006-019	1
STEM STEERING (Ref # 21)	44037-024	1
GASKET FORK DRAIN PLG (Ref # 22)	44045-002	2
SCREW PAN HEAD 4X8 (Ref # 23)	220B0408	2
BOLT-SMALL-UPSET (Ref # 24)	115B0832	1
WASHER SPRING 8MM (Ref # 25)	461F0800	1
BOLT FORK TOP (Ref # 26)	44041-021	2

© 2024 Kawasaki Motors Corp., U.S.A.

1973 H1-D PARTS LIST

FRONT FORK (H1/A/C)

ITEM NAME	PART NUMBER	QUANTITY
LOCK ASSY STEERING (Ref # 27)	27016-017	1
SCREW RIVET (Ref # 28)	92099-001	1
KNOB STEERING DAMPER (Ref # 29)	46101-004	1
NUT 12MM (Ref # 30)	315N1200A	1
SPRING STRG DAMP KNOB (Ref # 31)	46126-001	1
NUT STEERING STEM (Ref # 32)	92090-015	1
WASHER STEERING STEM (Ref # 33)	46100-001	1
NUT STEERING STEM LCK (Ref # 34)	92090-007	1
CAP, STEERING STEM (Ref # 35)	46098-016	1
CONE STRNG STEM BERNG (Ref # 36)	92047-006	2
PLATE STRG DAMP STEEL (Ref # 37)	46106-005	1
PLATE STRG DAMP FRCTN (Ref # 38)	46104-005	2
PLATE STRG DAMP ANCHR (Ref # 39)	46105-005	1
PLATE STRG DAMP STEEL (Ref # 40)	46106-006	1
SPRING-STEERING DAMP (Ref # 41)	46124-006	1
NUT STRG DAMPER GUIDE (Ref # 42)	46125-005	1
PIN COTTER 1.6X15 (Ref # 43)	550D1615	1
BOLT SMALL (Ref # 44)	114G0812	1
WASHER SPRING 8MM (Ref # 45)	461F0800	1

© 2024 Kawasaki Motors Corp., U.S.A.