1997 1100 STX PARTS DIAGRAM

Electrical Equipment

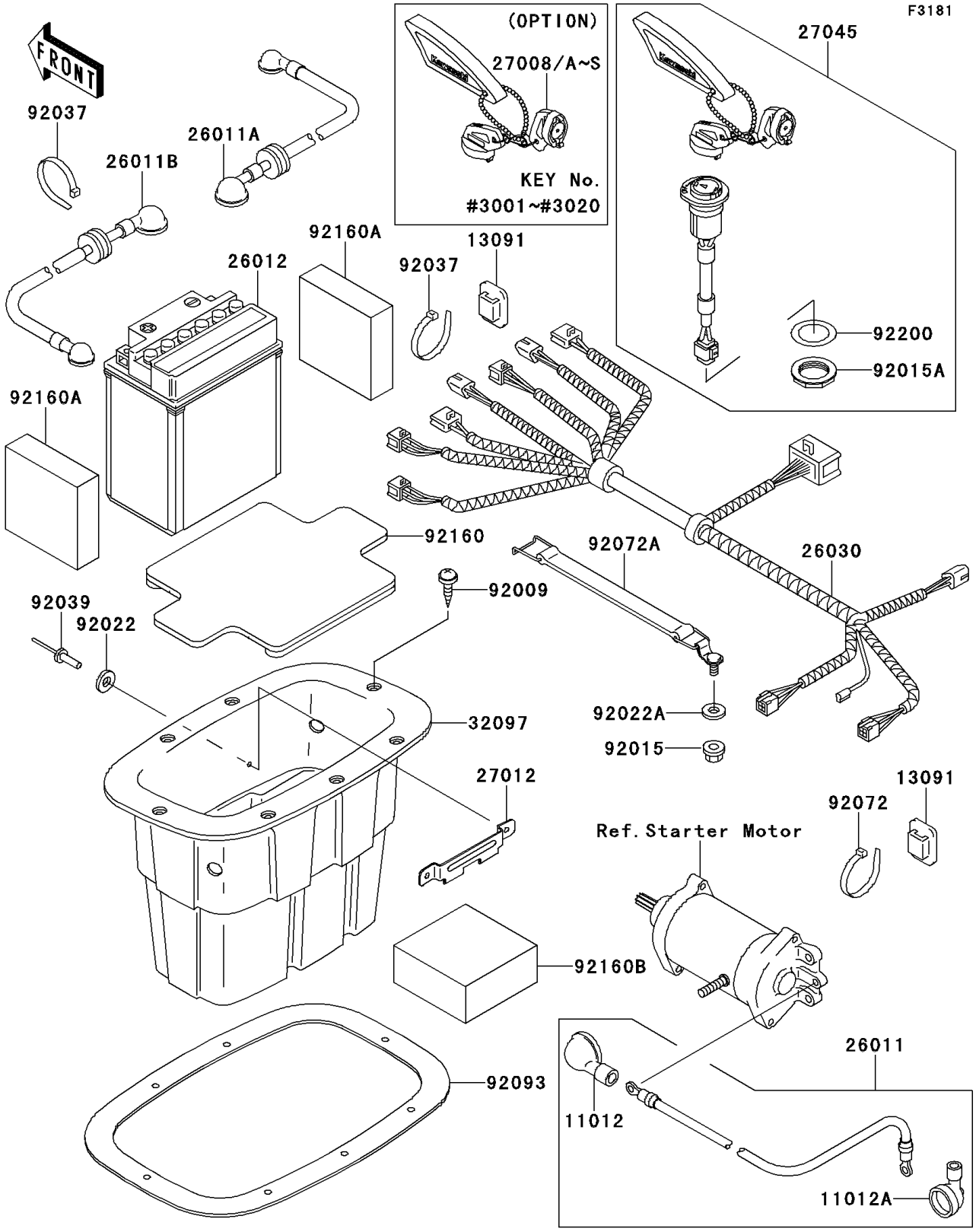

© 2024 Kawasaki Motors Corp., U.S.A.

1997 1100 STX PARTS LIST

Electrical Equipment

ITEM NAME	PART NUMBER	QUANTITY
CAP (Ref # 11012)	11012-3004	1
CAP,LEAD WIRE (Ref # 11012A)	11012-3726	1
HOLDER,BAND (Ref # 13091)	13091-3764	10
WIRE-LEAD,RELAY-STARTER (Ref # 26011)	26011-3797	1
WIRE-LEAD,BATTERY(-)-STARTER (Ref # 26011A)	26011-3843	1
WIRE-LEAD,BATTERY(+)-RELAY (Ref # 26011B)	26011-3844	1
BATTERY,YTX20L-BS,12V 18AH (Ref # 26012)	26012-3725	1
HARNESS,MAIN (Ref # 26030)	26030-3707	1
KEY-LOCK,MAGNETIC SW,#3001 (Ref # 27008)	27008-3745	1
KEY-LOCK,MAGNETIC SW,#3002 (Ref # 27008A)	27008-3746	1
KEY-LOCK,MAGNETIC SW,#3003 (Ref # 27008B)	27008-3747	1
KEY-LOCK,MAGNETIC SW,#3004 (Ref # 27008C)	27008-3748	1
KEY-LOCK,MAGNETIC SW,#3005 (Ref # 27008D)	27008-3749	1
KEY-LOCK,MAGNETIC SW,#3006 (Ref # 27008E)	27008-3750	1
KEY-LOCK,MAGNETIC SW,#3007 (Ref # 27008F)	27008-3751	1
KEY-LOCK,MAGNETIC SW,#3008 (Ref # 27008G)	27008-3752	1
KEY-LOCK,MAGNETIC SW,#3009 (Ref # 27008H)	27008-3753	1
KEY-LOCK,MAGNETIC SW,#3010 (Ref # 27008I)	27008-3754	1
KEY-LOCK,MAGNETIC SW,#3011 (Ref # 27008J)	27008-3755	1
KEY-LOCK,MAGNETIC SW,#3012 (Ref # 27008K)	27008-3756	1
KEY-LOCK,MAGNETIC SW,#3013 (Ref # 27008L)	27008-3757	1
KEY-LOCK,MAGNETIC SW,#3014 (Ref # 27008M)	27008-3758	1
KEY-LOCK,MAGNETIC SW,#3015 (Ref # 27008N)	27008-3759	1
KEY-LOCK,MAGNETIC SW,#3016 (Ref # 27008O)	27008-3760	1
KEY-LOCK,MAGNETIC SW,#3017 (Ref # 27008P)	27008-3761	1
KEY-LOCK,MAGNETIC SW,#3018 (Ref # 27008Q)	27008-3762	1
KEY-LOCK,MAGNETIC SW,#3019 (Ref # 27008R)	27008-3763	1
KEY-LOCK,MAGNETIC SW,#3020 (Ref # 27008S)	27008-3764	1
HOOK (Ref # 27012)	27012-3796	1

© 2024 Kawasaki Motors Corp., U.S.A.

1997 1100 STX PARTS LIST

Electrical Equipment

ITEM NAME	PART NUMBER	QUANTITY
SWITCH-ASSY,MAIN (Ref # 27045)	27045-3716	1
CASE-BATTERY (Ref # 32097)	32097-3706	1
SCREW,TAPPING,5X20 (Ref # 92009)	92009-3716	7
NUT,6MM (Ref # 92015)	92015-3767	2
NUT (Ref # 92015A)	92015-3848	1
WASHER,5X16X1.5 (Ref # 92022)	92022-3041	2
WASHER,6.5X20X1.5 (Ref # 92022A)	92022-3710	2
CLAMP (Ref # 92037)	92037-1173	4
RIVET (Ref # 92039)	92039-3714	2
BAND (Ref # 92072)	92072-3778	6
BAND,BATTERY (Ref # 92072A)	92072-3810	2
SEAL,BATTERY CASE (Ref # 92093)	92093-3750	1
DAMPER,BATTERY (Ref # 92160)	92160-3877	1
DAMPER (Ref # 92160A)	92160-3889	2
DAMPER (Ref # 92160B)	92160-3890	1
WASHER (Ref # 92200)	92200-3736	1

© 2024 Kawasaki Motors Corp., U.S.A.