1982 CSR PARTS DIAGRAM

CYLINDER HEAD COVER ('81-'82 H1/H2)

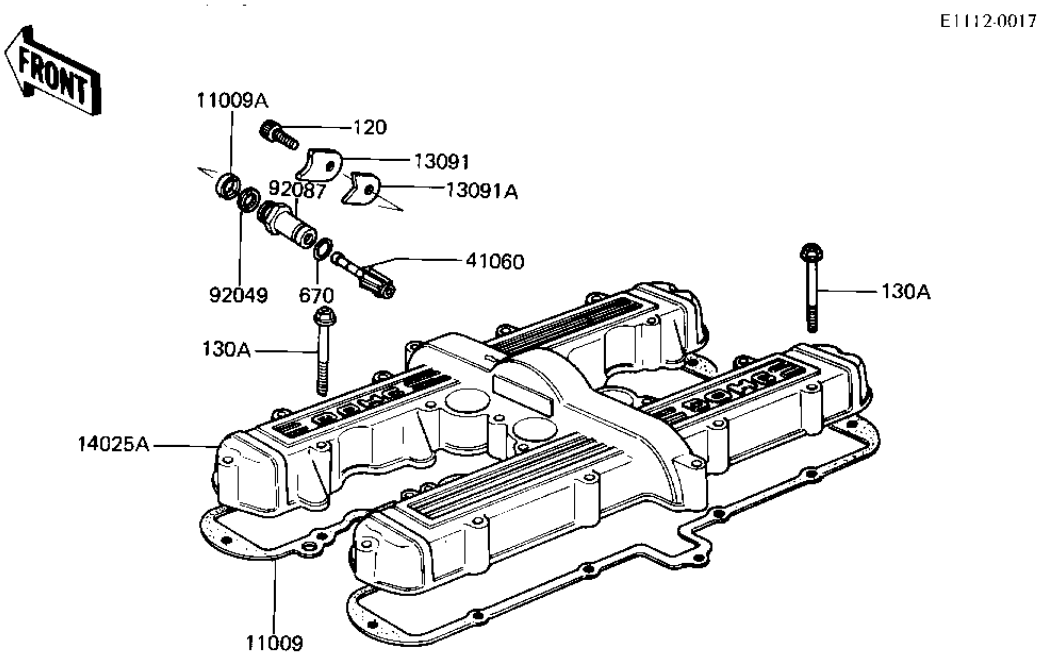

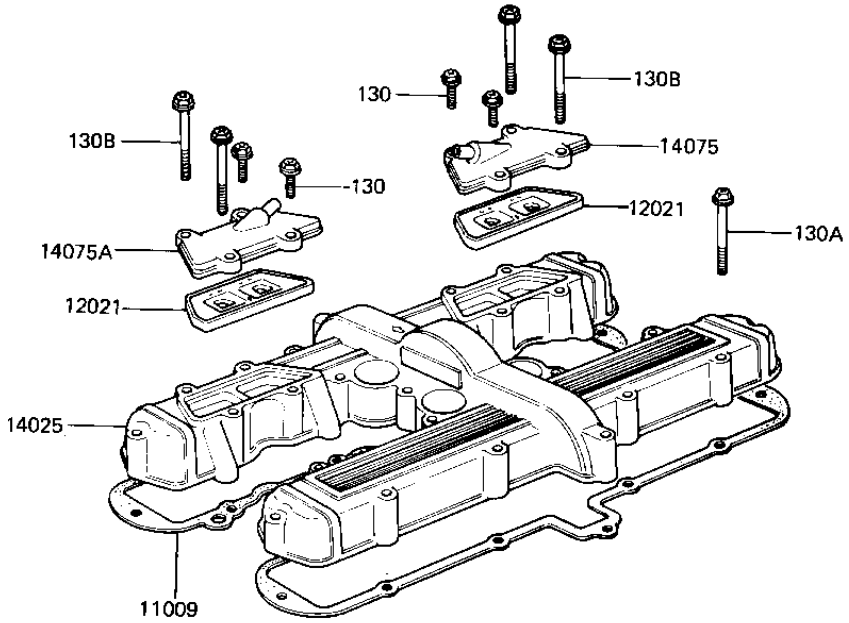

© 2026 Kawasaki Motors Corp., U.S.A.

1982 CSR PARTS LIST

CYLINDER HEAD COVER ('81-'82 H1/H2)

ITEM NAME	PART NUMBER	QUANTITY
GASKET,CYLINDER HEAD (Ref # 11009)	11009-1237	1
GASKET,TACHOMETER GER (Ref # 11009A)	92065-103	1
VALVE ASSY REED (Ref # 12021)	12021-1003	2
HOLDER,TACHOMETER2.3T (Ref # 13091)	13091-1008	1
HOLDER,TACHOMETR,3.2T (Ref # 13091A)	13091-1009	1
COVER,CYLINDER HEAD,S (Ref # 14025)	14025-1329	1
COVER CYLINDER HEAD (Canada) (Ref # 14025A)	14025-1330	1
CAP-ASSY,REED VALVE,R (Ref # 14075)	14075-5016	1
CAP-ASSY,REED VALVE,L (Ref # 14075A)	14075-5017	1
GEAR,TACHOMETER,10T (Ref # 41060)	13223-011	1
OIL SEAL (Ref # 92049)	92050-075	1
GUIDE,TACHOMETER GEAR (Ref # 92087)	92087-010	1
BOLT,6X14 (Ref # 120)	120P0614	1
BOLT,FLANGED,6X20 (Ref # 130)	130G0620	4
BOLT,FLANGED,6X45 (Ref # 130A)	130G0645	20
BOLT,FLANGED,6X45 (Ref # 130A)	130G0645	24
BOLT,FLANGED,6X65 (Ref # 130B)	130G0665	4
"0" RING,10MM (Ref # 670)	670D1510	1

© 2026 Kawasaki Motors Corp., U.S.A.