1979 KZ1000 PARTS DIAGRAM

CYLINDER HEAD ('79-'80 A3/A3A/A4)

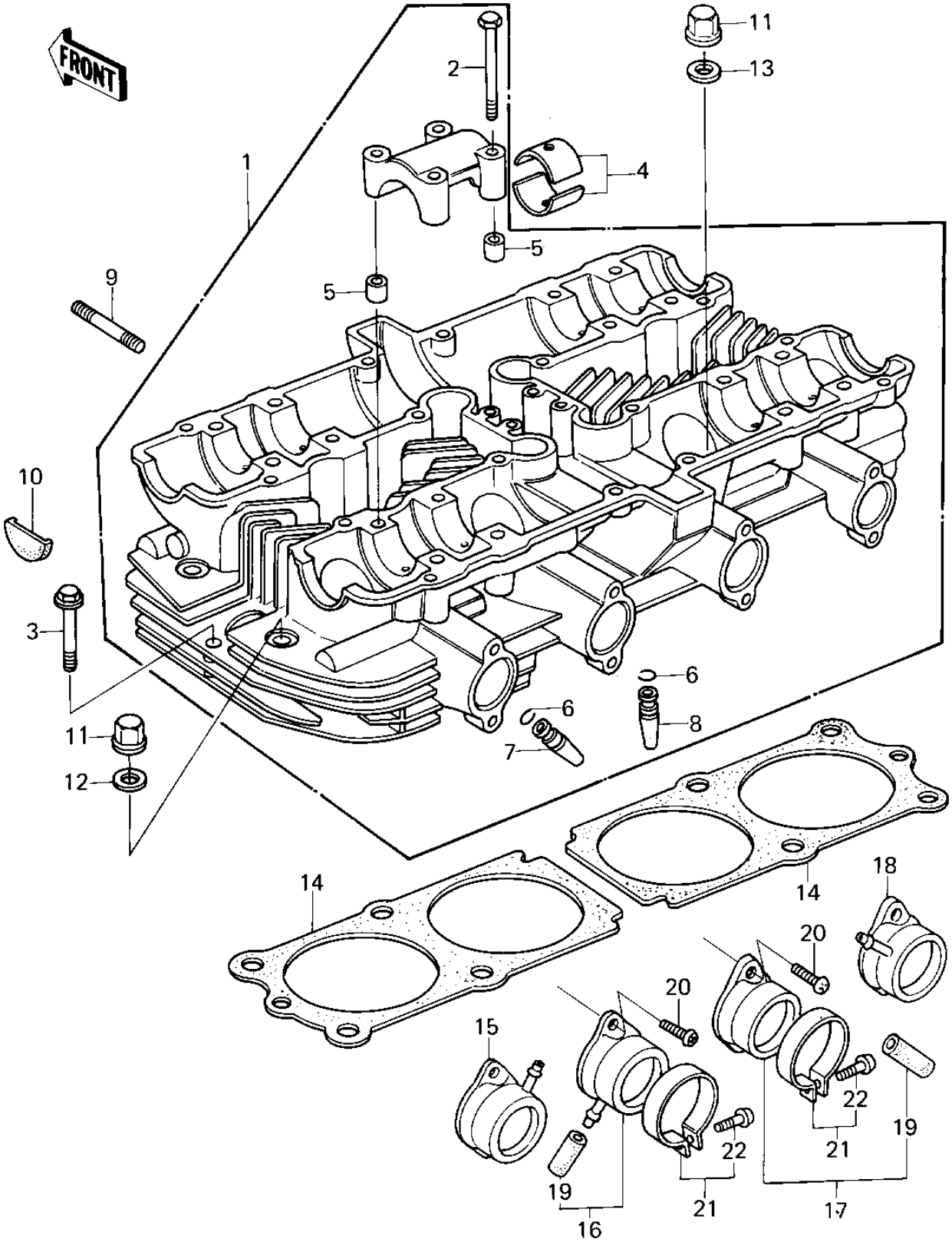

© 2024 Kawasaki Motors Corp., U.S.A.

1979 KZ1000 PARTS LIST

CYLINDER HEAD ('79-'80 A3/A3A/A4)

ITEM NAME	PART NUMBER	QUANTITY
BOLT,6X43 (Ref # 2)	92002-1881	16
BOLT,HEX HEAD,6X45 (Ref # 3)	92003-092	2
BUSHING,CAMSHAFT (Ref # 4)	13034-030	16
PIN-DOWEL (Ref # 5)	92042-007	8
CIRCLIP-VALVE (Ref # 6)	92036-023	8
GUIDE,INLET VALVE (Ref # 7)	12013-009	4
GUIDE,EXHAUST VALVE (Ref # 8)	49002-1002	4
STUD,8X30 (Ref # 9)	92004-1069	8
PLUG,CAM SHAFT (Ref # 10)	92066-017	4
NUT,CYLINDER HEAD (Ref # 11)	92015-076	12
WASHER,PLAIN,10MM (Ref # 12)	92022-215	4
WASHER PLAIN 10MM (Ref # 13)	411B1000	8
GASKET,CYLINDER HEAD (Ref # 14)	11004-076	2
HOLDER,CARBURETOR,L. (Ref # 16)	16065-029	2
HOLDER-R.H CARBRETOR (Ref # 17)	16065-028	2
RUBBER PLUG (Ref # 19)	92068-006	4
SCREW PAN HEAD 6X18 (Ref # 20)	220B0618	8
CLAMP,HOLDER (Ref # 21)	92037-077	4
SCREW,PAN HEAD (Ref # 22)	92011-037	4

© 2024 Kawasaki Motors Corp., U.S.A.