1977 KZ900-A5 PARTS DIAGRAM

CLUTCH

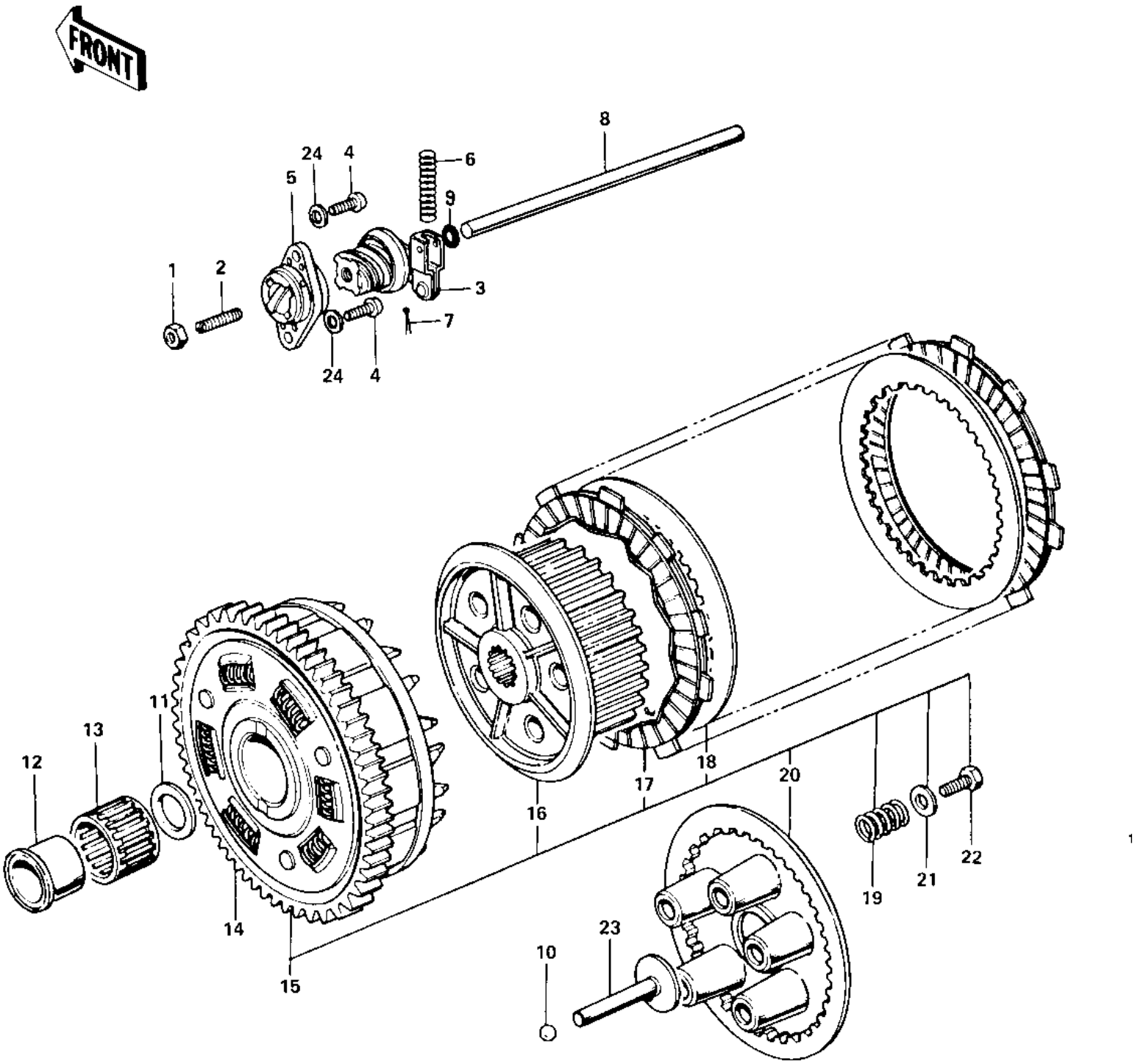

© 2024 Kawasaki Motors Corp., U.S.A.

1977 KZ900-A5 PARTS LIST

CLUTCH

ITEM NAME	PART NUMBER	QUANTITY
NUT 8MM (Ref # 1)	315B0800	
SCREW,SLOTTED,8X25 (Ref # 2)	92014-014	
INNER,CLUTCH RELEASE (Ref # 3)	13102-013	
SCREW PAN HEAD 6X16 (Ref # 4)	220B0616	
OUTER,CLUTCH RELEASE (Ref # 5)	13118-007	
SPRING-CLUTCH RELEASE (Ref # 6)	92081-069	
PIN COTTER 1.6X15 (Ref # 7)	550D1615	
PUSH ROD,CLUTCH (Ref # 8)	13116-021	
"O" RING,7MM (Ref # 9)	670B1507	
BALL STEEL 3/8' (Ref # 10)	600A1200	
WASHER,CLUTCH THRUST (Ref # 11)	92026-022	
BUSHING,CLUTCH (Ref # 12)	92028-135	
BEARING,KTV323723 (Ref # 13)	92046-028	
CLUTCH-ASSY (Ref # 14)	13095-036	
CLUTCH-ASSY (Ref # 15)	13081-045	
CLUTCH-ASSY (Ref # 16)	13087-031	
PLATE,CLUTCH FRICTION (Ref # 17)	13088-030	
PLATE,CLUTCH STEEL (Ref # 18)	13089-022	
SPRING,CLUTCH (Ref # 19)	92081-1033	
SPRING,CLUTCH (Ref # 19)	92081-1033	
PLATE,CLUTCH SPRING (Ref # 20)	13187-006	
HOLDER,CLUTCH SPRING (Ref # 21)	13091-011	
BOLT-UPSET (Ref # 22)	116G0618	
PUSHER,CLUTCH SPRG PL (Ref # 23)	13116-022	
WASHER PLAIN 6MM (Ref # 24)	411B0600	

© 2024 Kawasaki Motors Corp., U.S.A.