1978 KZ650-B2A PARTS DIAGRAM

CAMSHAFTS/VALVES

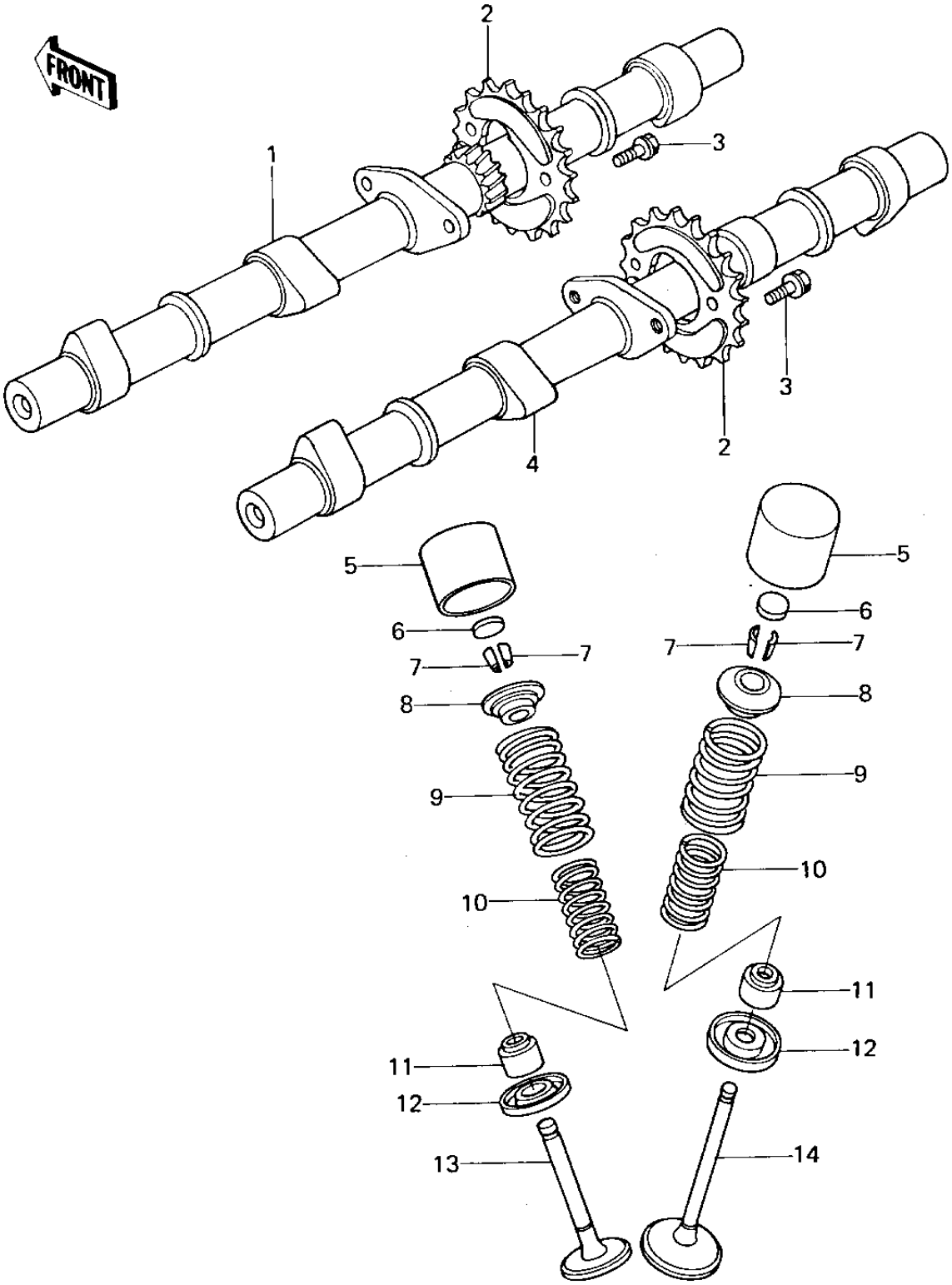

© 2024 Kawasaki Motors Corp., U.S.A.

1978 KZ650-B2A PARTS LIST

CAMSHAFTS/VALVES

ITEM NAME	PART NUMBER	QUANTITY
CAM SHAFT,EXHAUST (Ref # 1)	12044-013	1
SPROCKET,CAM (Ref # 2)	12046-004	2
BOLT,SPROCKET FITTING (Ref # 3)	92003-208	4
CAM SHAFT,INLET (Ref # 4)	12044-012	1
TAPPET (Ref # 5)	12032-1001	8
TAPPET (Ref # 5)	12032-1001	8
SHIM,2.007 (Ref # 6)	92025-1090	AR
SHIM,2.05T (Ref # 6)	92025-1091	AR
SHIM,2.10T (Ref # 6)	92025-1092	AR
SHIM,2.15T (Ref # 6)	92025-1093	AR
SHIM,2.20T (Ref # 6)	92025-1094	AR
SHIM,2.25T (Ref # 6)	92025-1095	AR
SHIM,2.30T (Ref # 6)	92025-1096	AR
SHIM,2.35T (Ref # 6)	92025-1097	AR
SHIM,2.40T (Ref # 6)	92025-1098	AR
SHIM,2.45T (Ref # 6)	92025-1099	AR
SHIM,2.50T (Ref # 6)	92025-1100	AR
SHIM T2.55 (Ref # 6)	92025-1101	AR
SHIM,2.60T (Ref # 6)	92025-1102	AR
SHIM,2.65T (Ref # 6)	92025-1103	AR
SHIM,2.70T (Ref # 6)	92025-1104	AR
SHIM,2.75T (Ref # 6)	92025-1105	AR
SHIM,2.80T (Ref # 6)	92025-1106	AR
SHIM,2.85T (Ref # 6)	92025-1107	AR
SHIM,2.90T (Ref # 6)	92025-1108	AR
SHIM,2.95 (Ref # 6)	92025-1109	AR
SHIM,3.00T (Ref # 6)	92025-1110	AR
SHIM,3.05T (Ref # 6)	92025-1111	AR
SHIM,3.10T (Ref # 6)	92025-1112	AR

© 2024 Kawasaki Motors Corp., U.S.A.

1978 KZ650-B2A PARTS LIST

CAMSHAFTS/VALVES

ITEM NAME	PART NUMBER	QUANTITY
SHIM,3.15T (Ref # 6)	92025-1113	AR
SHIM,3.20T (Ref # 6)	92025-1114	AR
SPLIT KEEPER (Ref # 7)	12011-004	16
RETAINER,VALVE SPRING (Ref # 8)	12009-008	8
SPRING,OUTER VALVE (Ref # 9)	12007-012	8
SPRING,INNER VALVE (Ref # 10)	12007-011	8
OIL SEAL,RV37129.5 (Ref # 11)	92049-016	8
SEAT-SPRING,VALVE (Ref # 12)	16007-1024	8
VALVE,EXHAUST (Ref # 13)	12005-008	4
VALVE,INTAKE (Ref # 14)	12004-1011	4

© 2024 Kawasaki Motors Corp., U.S.A.