1981 GPz PARTS DIAGRAM

OIL PUMP/OIL FILTER

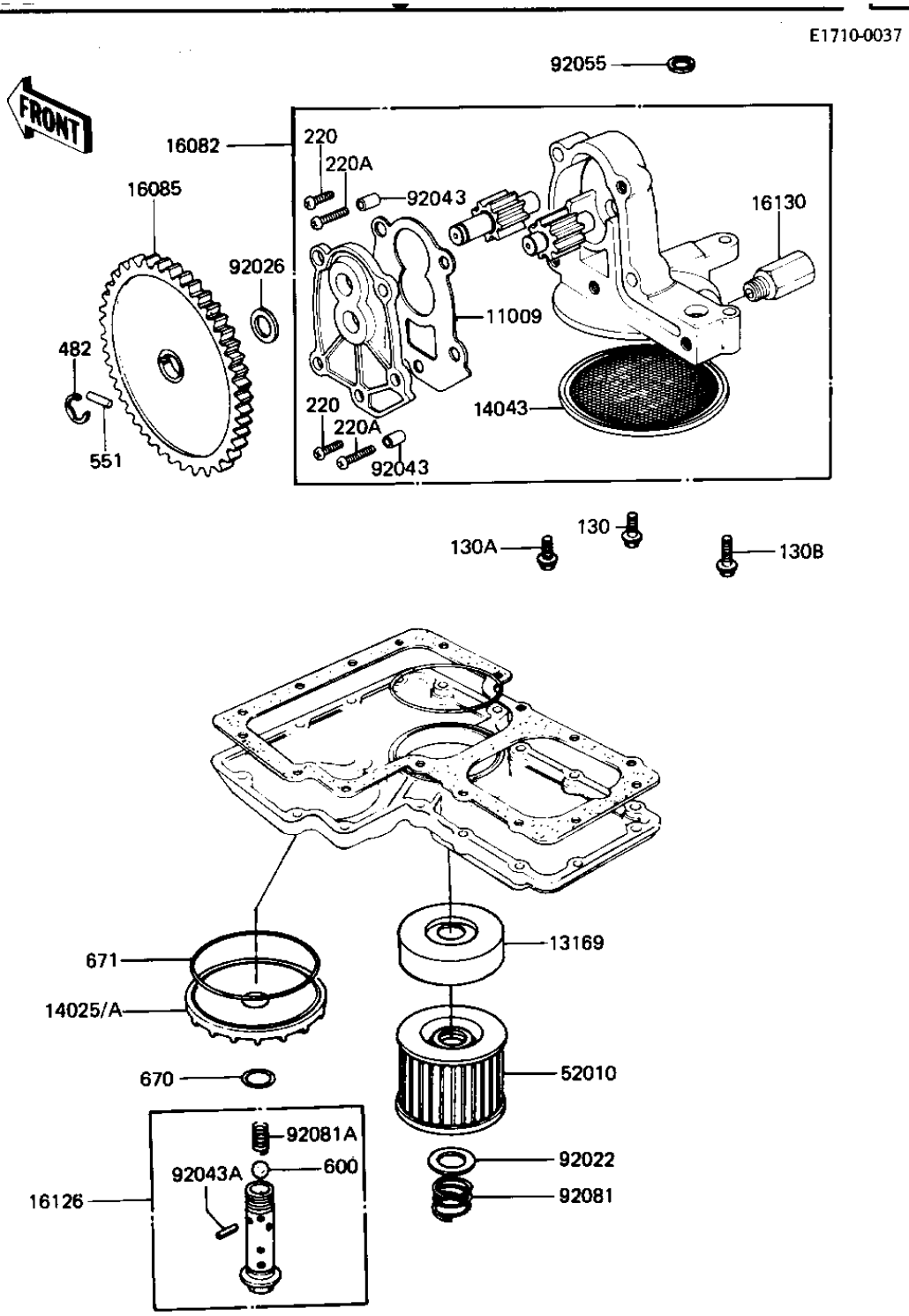

© 2024 Kawasaki Motors Corp., U.S.A.

1981 GPz PARTS LIST

OIL PUMP/OIL FILTER

ITEM NAME	PART NUMBER	QUANTITY
GASKET,OIL PUMP (Ref # 11009)	11009-1029	1
PLATE,OIL FILTER (Ref # 13169)	13169-1313	1
COVER,OIL FILTER (Ref # 14025A)	16101-004	1
STRAINER,OIL PUMP (Ref # 14043)	16111-004	1
PUMP-ASSY-OIL (Ref # 16082)	16082-5002	1
GEAR,OIL PUMP 49T (Ref # 16085)	16085-019	1
VALVE,OIL FILTER (Ref # 16126)	16126-1108	1
RELEAF VALVE ASSY (Ref # 16130)	16130-1001	1
FILTER,OIL (Ref # 52010)	16099-003	1
WASHER,20.5X30X1.0 (Ref # 92022)	92022-1012	1
WASHER,LOCK,16MM (Ref # 92026)	92026-080	1
PIN,DOWEL,8X10 (Ref # 92043)	92043-1302	2
SPRING PIN (Ref # 92043A)	92043-111	1
O RING,0.D=18MM (Ref # 92055)	92055-048	1
SPRING,OIL FILTER (Ref # 92081)	92081-1018	1
SPRING (Ref # 92081A)	92081-109	1
BOLT,FLANGED,6X25 (Ref # 130)	130G0625	1
BOLT,FLANGED,6X35 (Ref # 130A)	130H0635	1
BOLT,FLANGED,6X45 (Ref # 130B)	130G0645	1
SCREW PAN HEAD 6X18 (Ref # 220)	220B0618	4
SCREW PAN HEAD 6X28 (Ref # 220A)	220B0628	2
CIRCLIP,7MM (Ref # 482)	482K7000	1
PIN,DOWEL,3X14 (Ref # 551)	551A0314	1
BALL STEEL 3/8' (Ref # 600)	600A1200	1
"0" RING,16MM (Ref # 670)	670B2016	1
"0" RING,90MM (Ref # 671)	671B2590	1

© 2024 Kawasaki Motors Corp., U.S.A.