1982 KZ1000-J2 PARTS DIAGRAM

STARTER MOTOR/STARTER CLUTCH (KZ1000-J2/

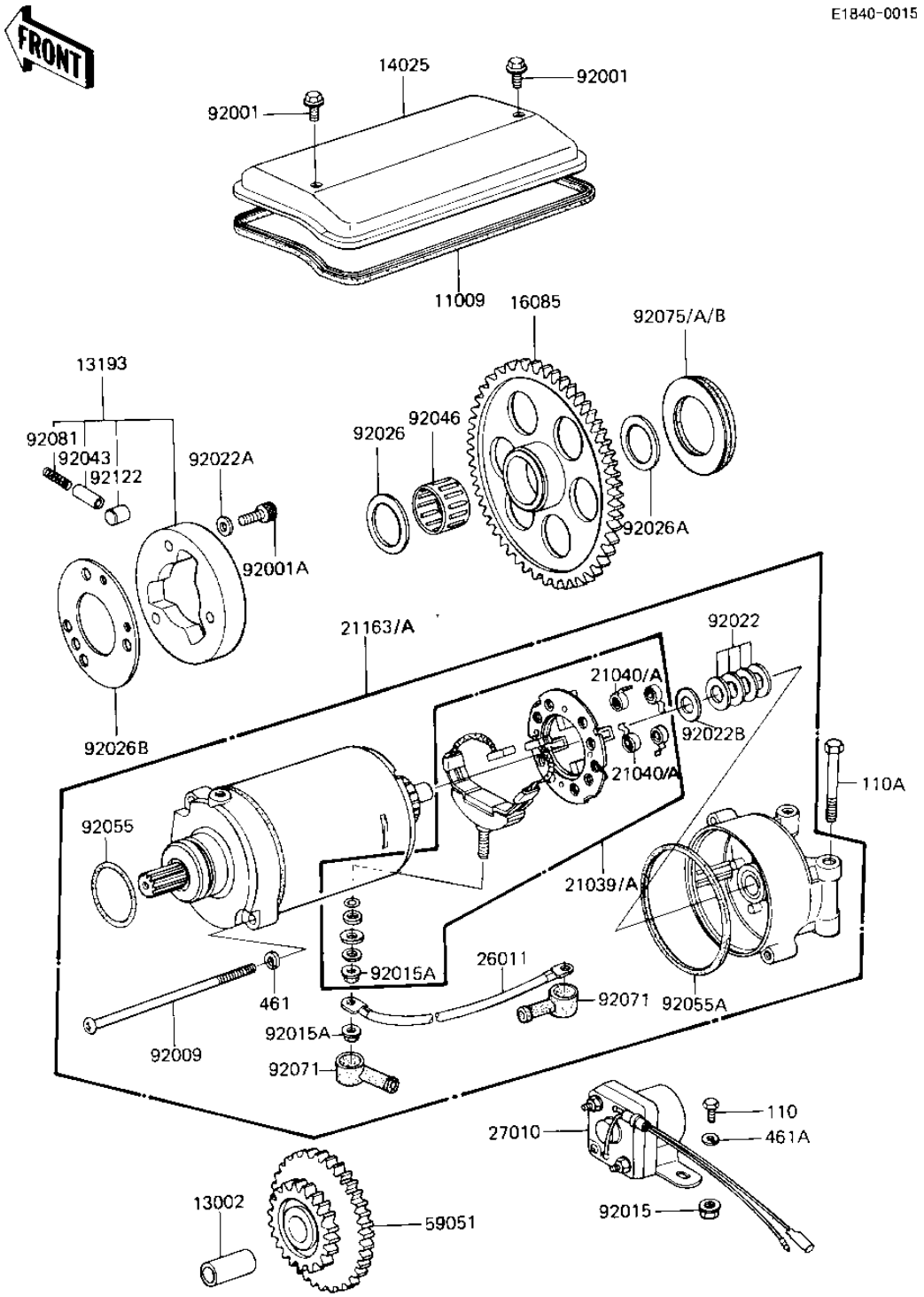

© 2024 Kawasaki Motors Corp., U.S.A.

1982 KZ1000-J2 PARTS LIST

STARTER MOTOR/STARTER CLUTCH (KZ1000-J2/

ITEM NAME	PART NUMBER	QUANTITY
GASKET,START MOTOR CV (Ref # 11009)	21166-001	1
PIN-PISTON (Ref # 13002)	13002-007	1
CLUTCH ASSY,STARTING (Ref # 13193)	13193-1006	1
COVER (Ref # 14025)	14025-1245	1
GEAR,STARTING CLUTCH (Ref # 16085)	16085-1012	1
BRUSH SET,CARBON (Ref # 21039)	21039-1005	1
BRUSH,CARBON (Ref # 21039A)	21039-1053	1
SPRING,CARBON BRUSH (Ref # 21040)	21040-1002	4
SPRING-BRUSH (Ref # 21040A)	21040-1003	4
STARTER-ELECTRIC (Ref # 21163)	21163-1143	1
STARTER-ELECTRIC (Ref # 21163A)	21163-1143	1
WIRE-LEAD,START MOTOR (Ref # 26011)	26011-1135	1
SWITCH,MAGNETIC (Ref # 27010)	27010-1047	1
GEAR,STARTING MOTOR (Ref # 59051)	21167-002	1
BOLT,6X10 (Ref # 92001)	92001-1151	2
BOLT (Ref # 92001A)	120P0816	3
SCREW,PAN HEAD,6X110 (Ref # 92009)	21015-005	2
NUT-6MM (Ref # 92015)	92015-1078	2
NUT-6MM (Ref # 92015A)	92015-1078	2
WASHER,THRUST,0.2T (Ref # 92022)	21025-011	4
WASHER,PLAIN (Ref # 92022A)	92022-1108	3
WASHER,THRUST,0.8T (Ref # 92022B)	92022-1132	1
SPACER (Ref # 92026)	92026-1031	1
SPACER (Ref # 92026A)	92026-1033	1
PLATE,CLUTCH STARTER (Ref # 92026B)	92026-112	1
PIN (Ref # 92043)	92043-087	3
BEARING,NEEDLE,K25302 (Ref # 92046)	92046-1022	1
"0" RING,STARTING MTR (Ref # 92055)	21027-004	1
"0" RING,STARTER MOTR (Ref # 92055A)	92055-1086	2

© 2024 Kawasaki Motors Corp., U.S.A.

1982 KZ1000-J2 PARTS LIST

STARTER MOTOR/STARTER CLUTCH (KZ1000-J2/

ITEM NAME	PART NUMBER	QUANTITY
GROMMET,CORD (Ref # 92071)	21017-017	2
DAMPER RUBBER,6.3T (Ref # 92075)	92075-1129	AR
DAMPER RUBBER,7.3T (Ref # 92075A)	92075-1130	AR
DAMPER RUBBER,8.3T (Ref # 92075B)	92075-1131	AR
SPRING (Ref # 92081)	92081-110	3
PIN (Ref # 92122)	92122-001	3
BOLT-UPSET,6X12 (Ref # 110)	112G0612	2
BOLT,EXCLUSIVE (Ref # 110A)	92001-1456	1
WASHER SPRING 5MM (Ref # 461)	461F0500	2
WASHER SPRING 6MM (Ref # 461A)	461F0600	2

© 2024 Kawasaki Motors Corp., U.S.A.