2005 800 SX-R PARTS DIAGRAM

Hull

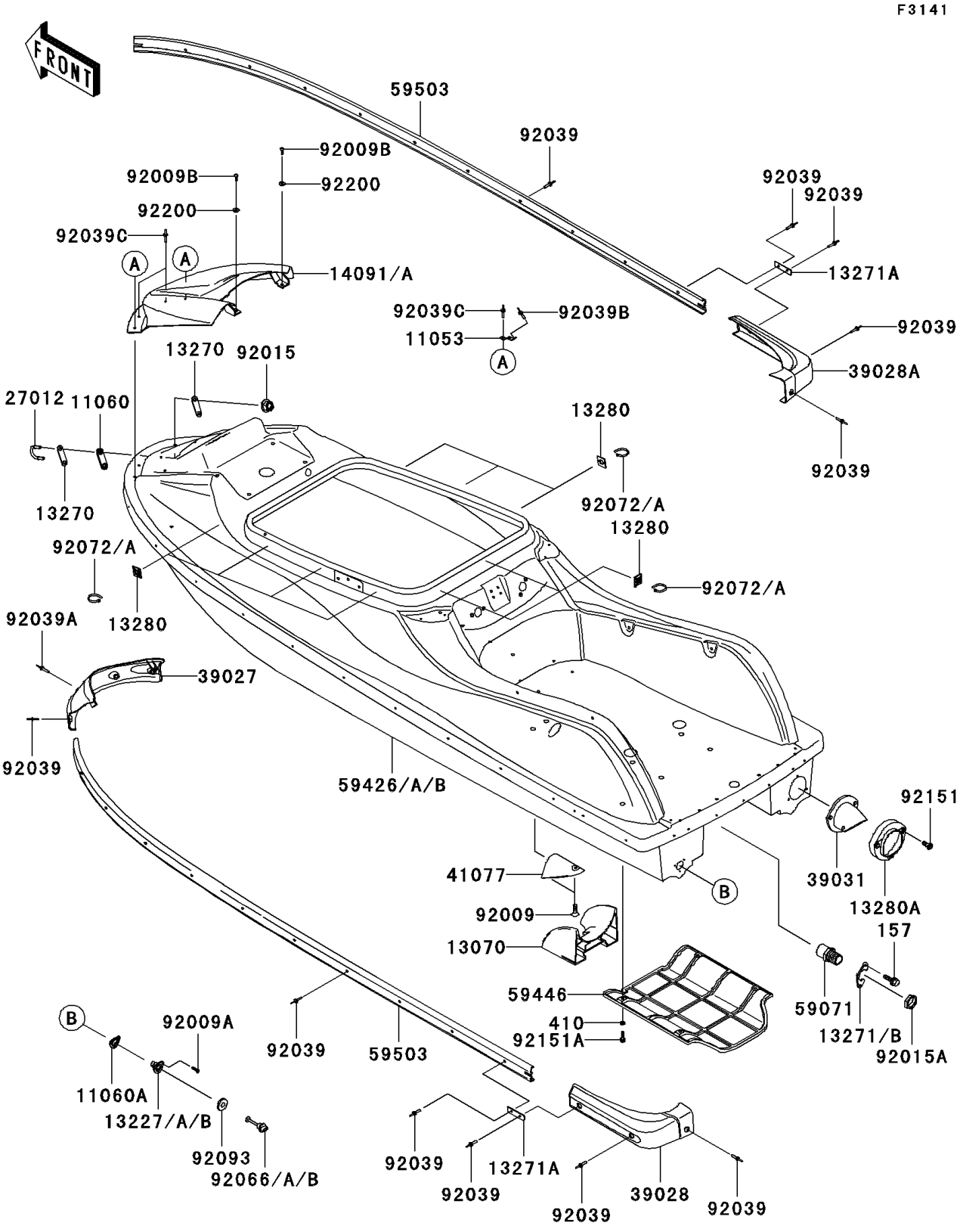

© 2024 Kawasaki Motors Corp., U.S.A.

2005 800 SX-R PARTS LIST

Hull

ITEM NAME	PART NUMBER	QUANTITY
BRACKET (Ref # 11053)	11053-3739	2
GASKET,U HOOK,FR (Ref # 11060)	11060-3799	1
GASKET,DRAIN PLUG (Ref # 11060A)	11060-3801	1
GUIDE,INTAKE (Ref # 13070)	13070-3708	1
HOUSING,DRAIN PLUG,F.BLACK (Ref # 13227A)	13227-3721-6Z	1
PLATE (Ref # 13270)	13270-3896	2
PLATE (Ref # 13271A)	13271-3884	2
PLATE (Ref # 13271B)	13271-3909	1
HOLDER (Ref # 13280)	13280-3739	9
HOLDER,TAIL PIPE CAP (Ref # 13280A)	13280-3742	1
COVER,NOSE,I.M.CARBON (Ref # 14091A)	14091-3773-380	1
HOOK (Ref # 27012)	27012-3797	1
BUMPER-FRONT,F.BLACK (Ref # 39027)	39027-3745-6Z	1
BUMPER-REAR,LH,F.BLACK (Ref # 39028)	39028-3753-6Z	1
BUMPER-REAR,RH,F.BLACK (Ref # 39028A)	39028-3754-6Z	1
CAP-END,TAIL PIPE (Ref # 39031)	39031-3709	1
ADAPTER (Ref # 41077)	41077-3701	1
JOINT (Ref # 59071)	59071-3763	1
COVER-JET PUMP (Ref # 59446)	59446-3755	1
FENDER-BOAT,F.BLACK (Ref # 59503)	59503-3707-6Z	2
SCREW,TAPPING,6X20 (Ref # 92009)	92009-3842	2
SCREW,TAPPING,4X16 (Ref # 92009A)	92009-3849	3
SCREW,5X16 (Ref # 92009B)	92009-3868	2
NUT,FLANGED,8MM (Ref # 92015)	92015-3709	2
NUT,20MM (Ref # 92015A)	92015-3738	1
RIVET (Ref # 92039)	92039-3778	30
RIVET (Ref # 92039A)	92039-3779	2
RIVET (Ref # 92039B)	92039-3780	2
RIVET (Ref # 92039C)	92039-3781	4

© 2024 Kawasaki Motors Corp., U.S.A.

2005 800 SX-R PARTS LIST

Hull

ITEM NAME	PART NUMBER	QUANTITY
BOLT-WSP,5X18 (Ref # 157)	157R0518	2
WASHER-PLAIN-SMALL,6MM (Ref # 410)	410S0600	4
PLUG,RR,DRAIN,F.BLACK (Ref # 92066A)	92066-3783-6Z	1
BAND,L=188 (Ref # 92072)	92072-1239	9
SEAL (Ref # 92093)	92093-3720	1
BOLT,SOCKET,M6,SHOULDER (Ref # 92151)	92151-3746	3
BOLT,SOCKET,6X20 (Ref # 92151A)	92151-3774	4
WASHER,5.9X16X1.5 (Ref # 92200)	92200-3714	2
HULL-COMP,G.BLACK (Ref # 59426B)	59426-3943-650	1

© 2024 Kawasaki Motors Corp., U.S.A.