1966 W1 PARTS DIAGRAM

WHEELS/TIRES

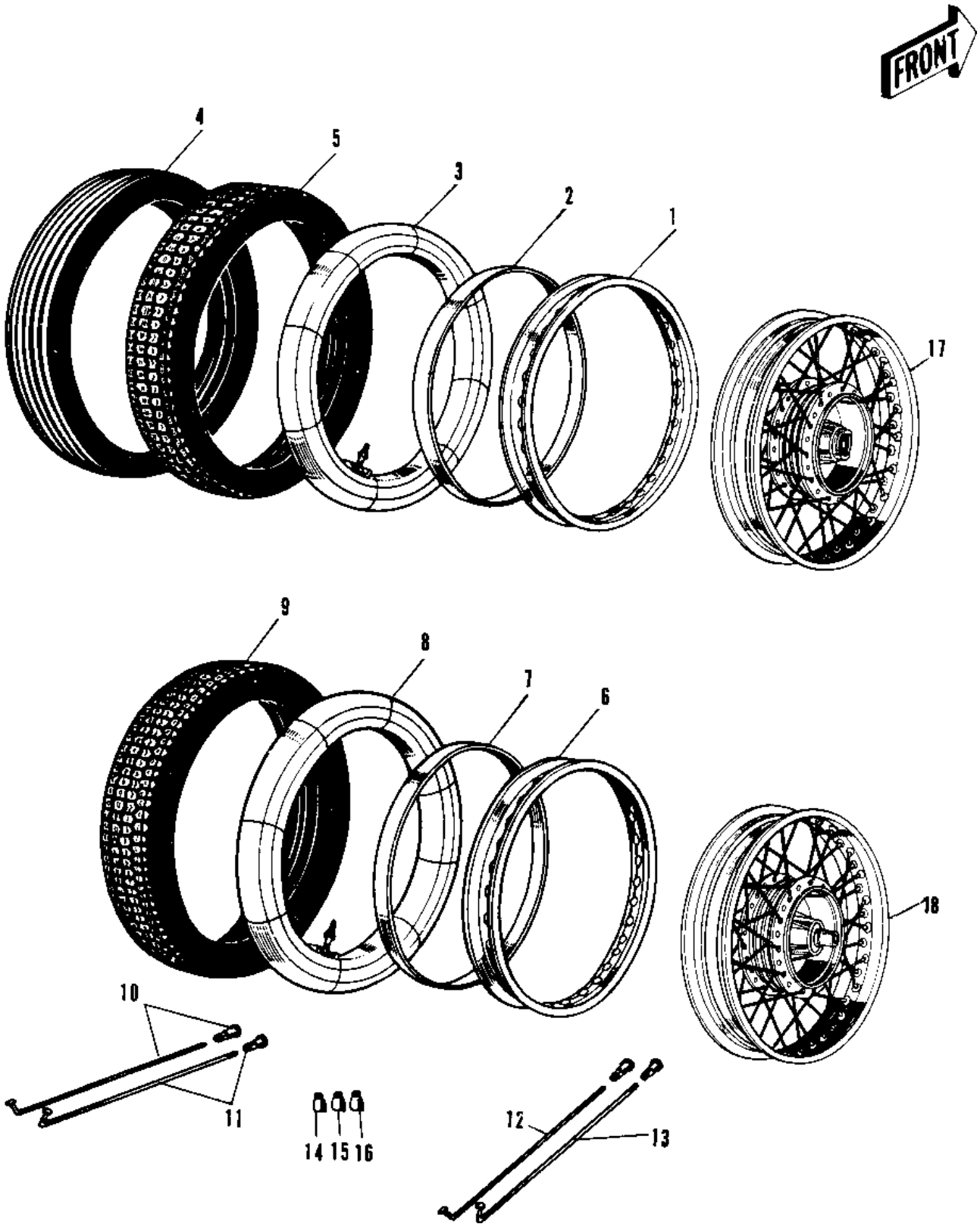

© 2024 Kawasaki Motors Corp., U.S.A.

1966 W1 PARTS LIST

WHEELS/TIRES

ITEM NAME	PART NUMBER	QUANTITY
UNAVAILABLE IN PRICE BOOK (Ref # 1)	41025-025	
RIM,1.85BX18W (Ref # 1)	41025-053	
BAND,RIM,4.00/5.10-18 (Ref # 2)	41023-1006	
TUBE 300/325/360-18 (Ref # 3)	41022-028	
UNAVAILABLE IN PRICE BOOK (Ref # 4)	41013-008	
RIM,1.85BX18W (Ref # 6)	41025-053	
BAND,RIM,4.00/5.10-18 (Ref # 7)	41023-1006	
TUBE 300/325/360-18 (Ref # 8)	41022-028	
UNAVAILABLE IN PRICE BOOK (Ref # 9)	41021-002	
SPOKE-ASY,FR INNER (Ref # 10)	41027-013	
SPOKE-ASY,FR OUTER (Ref # 11)	41028-014	
SPOKE ASSY REAR INNER (Ref # 12)	41027-012	20
SPOKE-ASY,RR OUTER (Ref # 13)	41028-046	20

© 2024 Kawasaki Motors Corp., U.S.A.