1968 W1SS PARTS DIAGRAM

MUFFLERS (W1SS/W2SS)

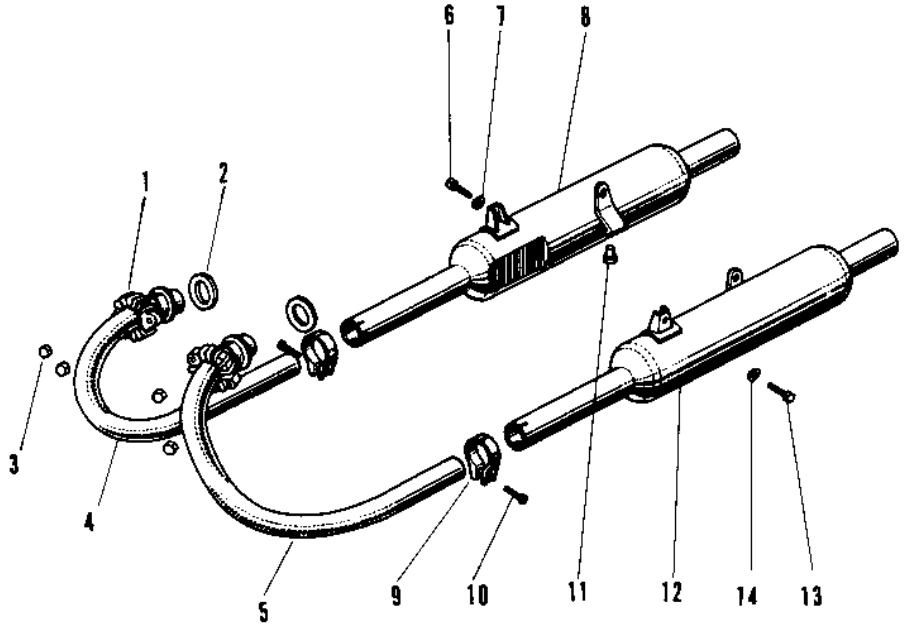

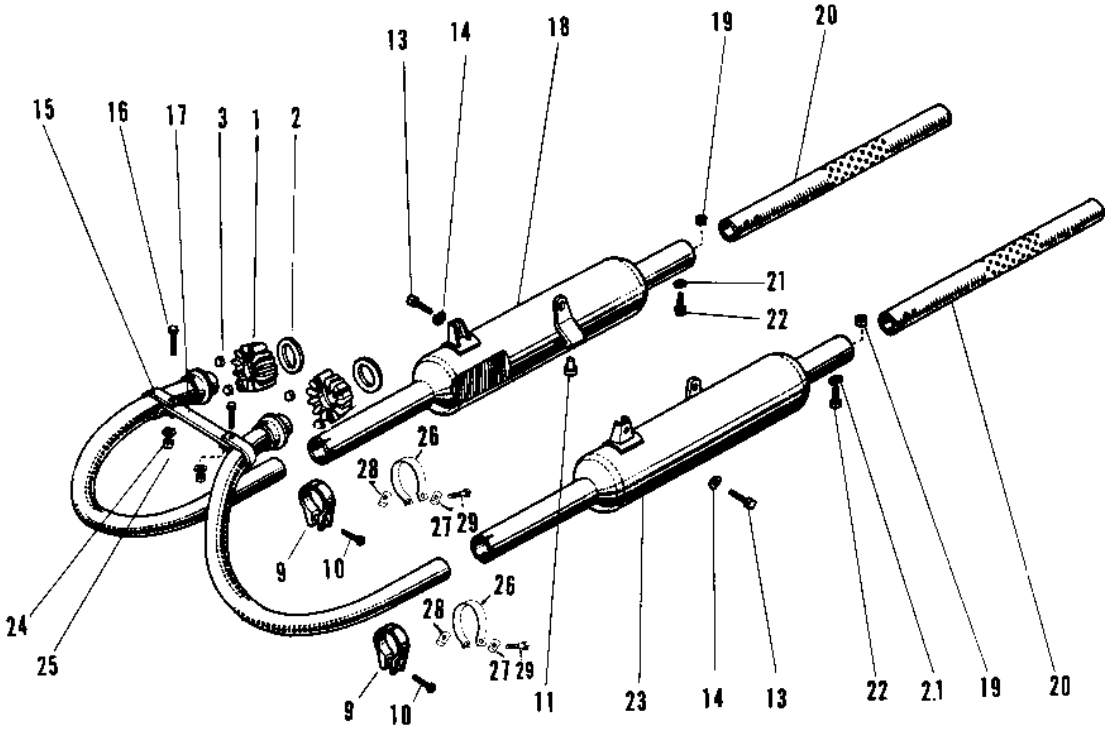

© 2024 Kawasaki Motors Corp., U.S.A.

1968 W1SS PARTS LIST

MUFFLERS (W1SS/W2SS)

ITEM NAME	PART NUMBER	QUANTITY
JOINT EXHAUST PIPE (Ref # 1)	18069-019	2
GASKET,EXHAUST PIPE H (Ref # 2)	11009-1840	2
UNAVAILABLE IN PRICE BOOK (Ref # 3)	92015-012	4
PIPE-EXHAUST,R.H (Ref # 4)	18049-073	1
PIPE-EXHAUST,L.H (Ref # 5)	18049-072	1
BOLT HEAD LAMP MOUNT (Ref # 6)	92007-003	2
WASHER SPRING 8MM (Ref # 7)	461F0800	2
MUFFLER SET R.H (Ref # 8)	18003-013	1
CLAMP (Ref # 9)	92037-030	2
SCREW FLT FIL HD 6X25 (Ref # 10)	210E0625	(2
SCREW PAN HEAD 6X25 (Ref # 10)	220B0625	2
DAMPER RUBB MAIN STAD (Ref # 11)	92075-015	1
MUFFLER ASSY L.H (Ref # 12)	18002-032	1
BOLT HEAD LAMP MOUNT (Ref # 13)	92007-003	2
WASHER SPRING 8MM (Ref # 14)	461F0800	2
CLAMP EXHAUST PIPE (Ref # 15)	92037-036	2
BOLT-SMALL-UPSET,8X18 (Ref # 16)	115G0818	2
HOLDER EXHAUST PIPE (Ref # 17)	18072-001	1
UNAVAILABLE IN PRICE BOOK (Ref # 18~22)	18003-014	(1
MUFFLER ASSY R.H (Ref # 18~22)	18001-021	1
UNAVAILABLE IN PRICE BOOK (Ref # 19~23)	18002-033	(1
UNAVAILABLE IN PRICE BOOK (Ref # 19~23)	18002-034	1
NUT 6MM (Ref # 19)	311B0600	2
BUFFLE TUBE (Ref # 20)	18034-009	(1
BAFFLE TUBE (Ref # 20)	18033-042	2
WASHER SPRING 6MM (Ref # 21)	461F0600	2
BOLT HEX HEAD 6X8 (Ref # 22)	110B0608	2
WASHER SPRING 8MM (Ref # 24)	461F0800	2
NUT,8MM (Ref # 25)	311B0800	2

© 2024 Kawasaki Motors Corp., U.S.A.

1968 W1SS PARTS LIST

MUFFLERS (W1SS/W2SS)

ITEM NAME	PART NUMBER	QUANTITY
CLAMP (Ref # 26)	92037-038	2
BAND END B (Ref # 27)	21056-003	2
BAND END A (Ref # 28)	21056-002	2
BOLT-SMALL-UPSET (Ref # 29)	115B0832	2

© 2024 Kawasaki Motors Corp., U.S.A.