1980 LTD PARTS DIAGRAM

ENGINE COVERS

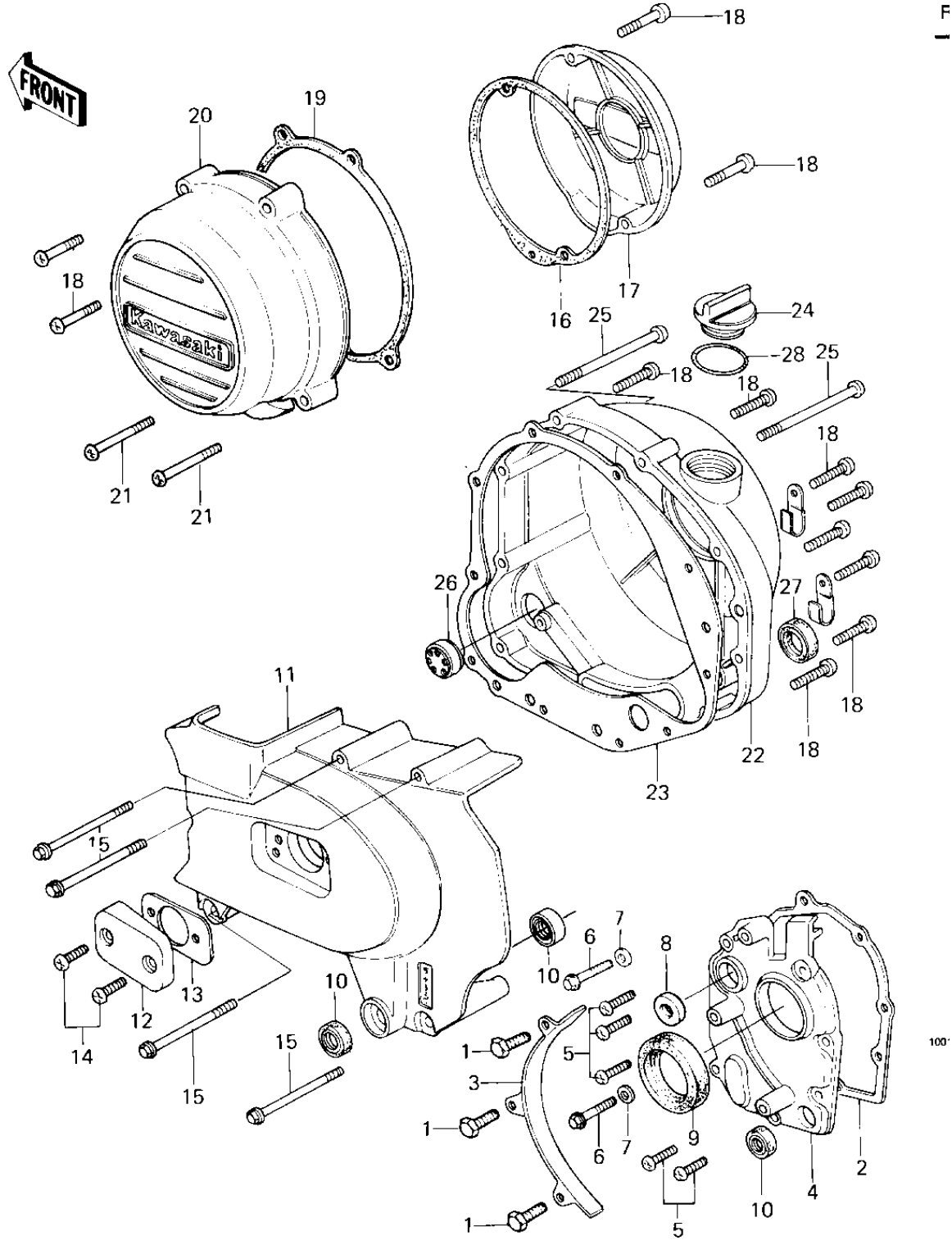

© 2024 Kawasaki Motors Corp., U.S.A.

1980 LTD PARTS LIST

ENGINE COVERS

ITEM NAME	PART NUMBER	QUANTITY
BOLT-UPSET 6X14 (Ref # 1)	112B0614	3
GASKET,TRANSMISSION C (Ref # 2)	11060-1056	1
GUIDE,CHAIN (Ref # 3)	12053-1006	1
COVER,MISSION (Ref # 4)	14024-011	1
SCREW PAN HEAD 6X20 (Ref # 5)	220B0620	5
BOLT,HEX HEAD,6X35 (Ref # 6)	92001-164	2
WASHER OIL PUMP BANJO (Ref # 7)	92022-077	2
OIL SEAL,TC7187 (Ref # 8)	92050-048	1
OIL SEAL,SD-8187 (Ref # 8)	92049-1017	1
OIL SEAL SC325210 (Ref # 9)	92050-024	1
OIL SEAL,TB13225.5 (Ref # 10)	92051-005	3
COVER,ENG SPROCKT,BUF (Ref # 11)	14026-035-80	1
COVER,CLUTCH ADJUSTNG (Ref # 12)	14028-006-80	1
GASKET,CLUTCH ADJ CAP (Ref # 13)	14049-004	1
SCREW PAN HEAD 6X18 (Ref # 14)	220B0618	2
BOLT-FLANGED,6X70 (Ref # 15)	130G0670	4
GASKET,PULSING COIL C (Ref # 16)	11060-1053	1
CAP,CONTACT BREAKER (Ref # 17)	11012-1098	1
SCREW PAN HEAD 6X30 (Ref # 18)	220B0630	12
GASKET,GENERATOR COVE (Ref # 19)	11009-1987	1
COVER,GENERATOR (Ref # 20)	14031-1040	1
SCREW PAN HEAD 6X40 (Ref # 21)	220B0640	2
COVER,R.H.ENG,BUFF FN (Ref # 22)	14032-117-80	1
GASKET,R.H.ENG COVER (Ref # 23)	14046-035	1
PLUG,OIL FILLER (Ref # 24)	16115-013	1
SCREW PAN HEAD 6X80 (Ref # 25)	220B0680	2
GAUGE,OIL LEVEL (Ref # 26)	52015-004	1
OIL SEAL SB20285 (Ref # 27)	92049-012	1
"0" RING,31MM (Ref # 28)	92055-049	1

© 2024 Kawasaki Motors Corp., U.S.A.