1977 Custom PARTS DIAGRAM

CRANKCASE BOLT & STUD PATTERN

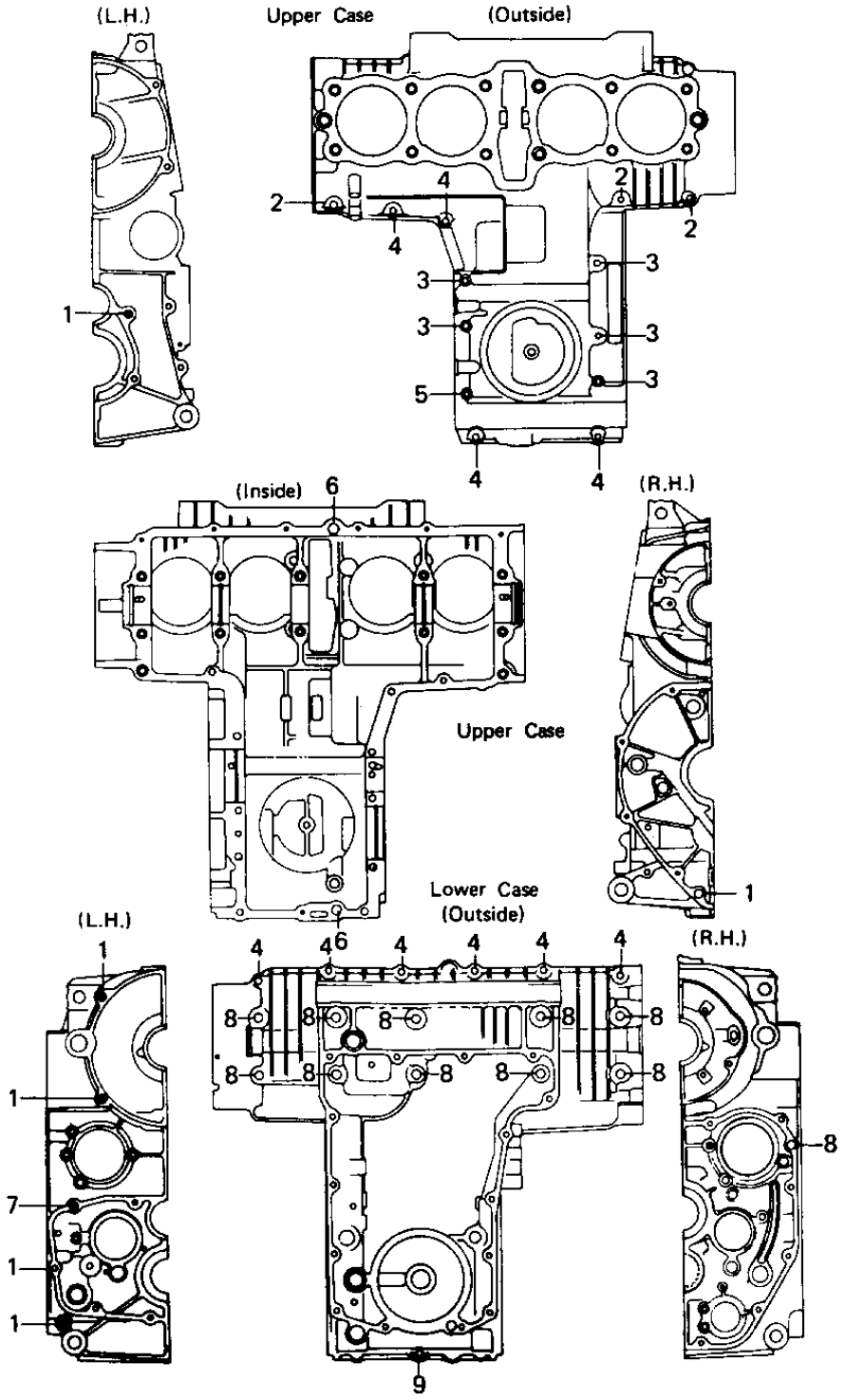

© 2024 Kawasaki Motors Corp., U.S.A.

1977 Custom PARTS LIST

CRANKCASE BOLT & STUD PATTERN

ITEM NAME	PART NUMBER	QUANTITY
PIN-DOWEL (Ref # 1)	92042-007	7
BOLT-FLANGED,6X50 (Ref # 2)	130G0650	3
BOLT,HEX HEAD,6X99 (Ref # 3)	92003-111	5
BOLT,6X43 (Ref # 4)	92002-1881	2
BOLT,6X43 (Ref # 4)	92002-1881	8
BOLT,HEX HEAD,6X116 (Ref # 5)	92003-113	1
PIN,DOWEL,10X8.2X14 (Ref # 6)	92043-1037	2
PIN,DOWEL,6X14 (Ref # 7)	551A0614	1
BOLT-FLANGED,8X95 (Ref # 8)	130P0895	10
BOLT,6X105 (Ref # 9)	92003-194	1

© 2024 Kawasaki Motors Corp., U.S.A.