1981 KX420 PARTS DIAGRAM

OPTIONAL PARTS

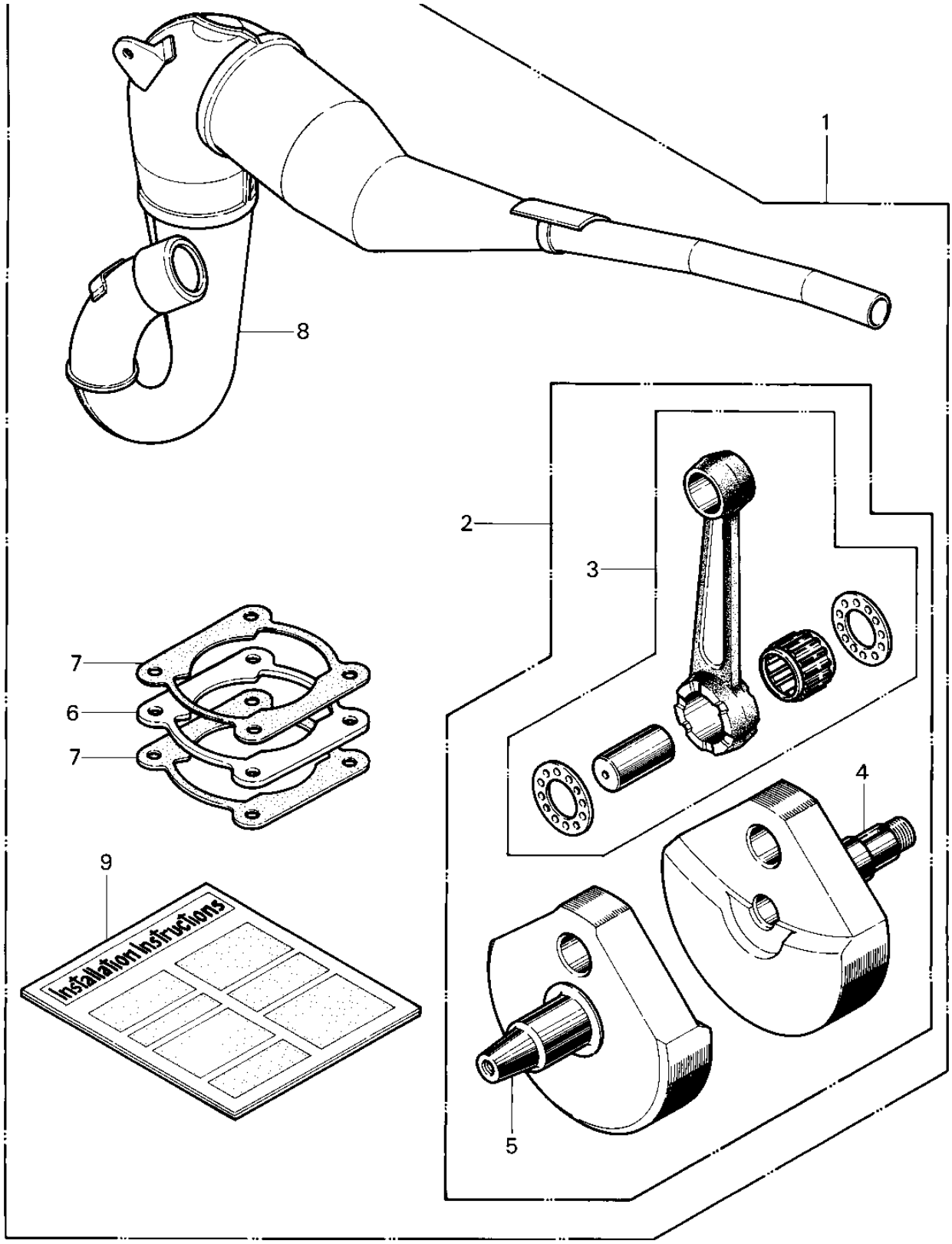

© 2025 Kawasaki Motors Corp., U.S.A.

1981 KX420 PARTS LIST

OPTIONAL PARTS

ITEM NAME	PART NUMBER	QUANTITY
KIT-KX450CC (Ref # 1)	99970-0003	1
CRANKSHAFT-COMP (Ref # 2)	13031-1059	1
CONNECTING ROD ASSY (Ref # 3)	13044-5011	1
CRANKSHAFT,RH (Ref # 4)	13037-1113	1
CRANKSHAFT,LH (Ref # 5)	13037-1112	1
SPACER,CYLINDER BASE (Ref # 6)	92026-1094	1
GASKET,CYLINDER BASE (Ref # 7)	11009-1130	1
BODY-COMP-MUFFLER (Ref # 8)	18002-1185	1
INST 450CC KIT (Ref # 9)	99963-0048-01	1

© 2025 Kawasaki Motors Corp., U.S.A.