1981 KX420 PARTS DIAGRAM

CRANKSHAFT/PISTON

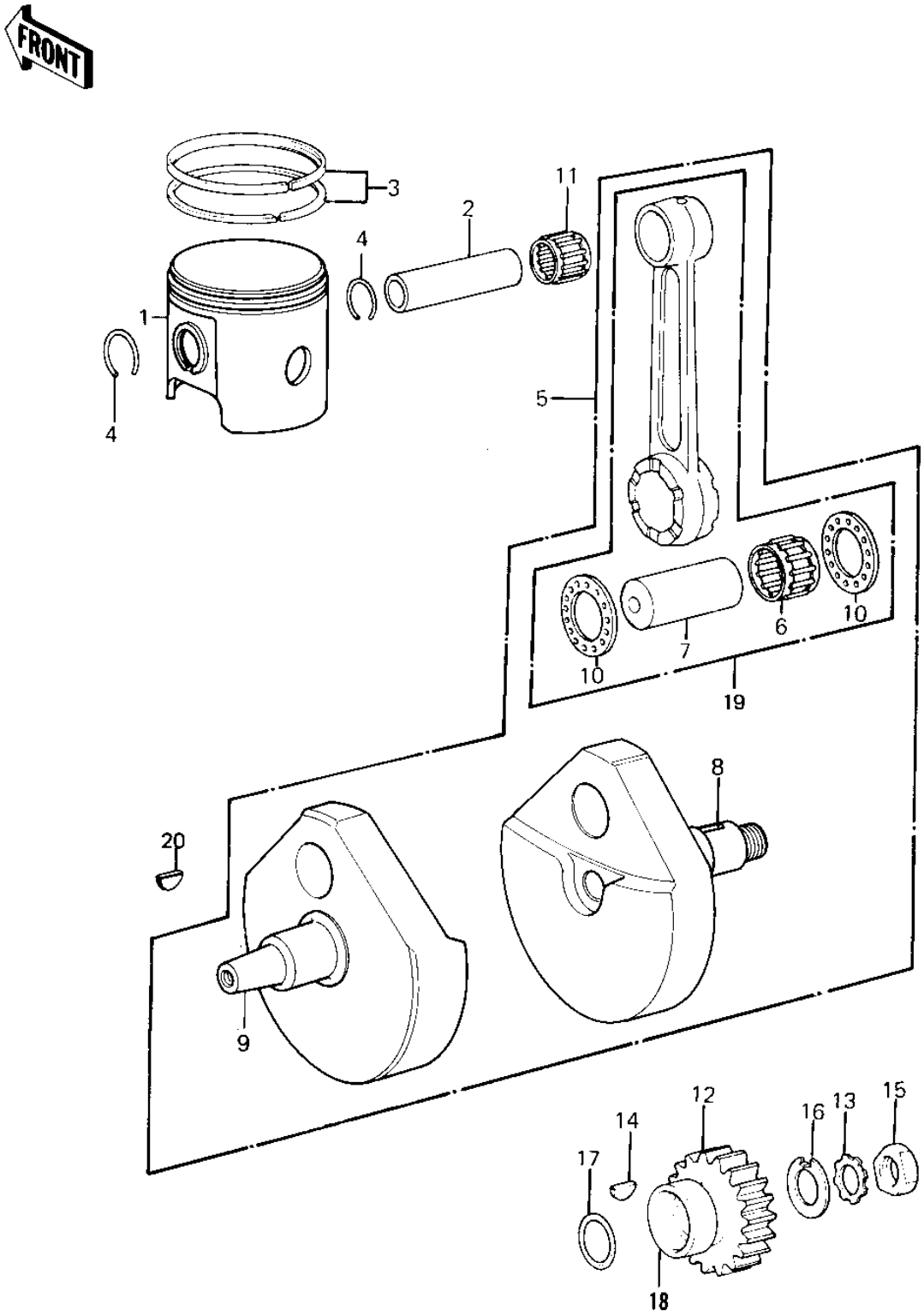

© 2025 Kawasaki Motors Corp., U.S.A.

1981 KX420 PARTS LIST

CRANKSHAFT/PISTON

ITEM NAME	PART NUMBER	QUANTITY
PISTON-ENGINE (Ref # 1)	13001-1075	
PIN-PISTON (Ref # 2)	13002-031	
RING SET,PISTON (Ref # 3)	13008-5030	
CIRCLIP PISTON PIN (Ref # 4)	92036-008	
CRANKSHAFT ASSY (Ref # 5)	13031-1031	
BEARING N,KT263322EGS (Ref # 6)	13034-1012	
PIN,CRANK,12X26X62 (Ref # 7)	13035-1003	
CRANKSHAFT,R.H. (Ref # 8)	13037-1035	
CRANKSHAFT,L.H. (Ref # 9)	13037-1061	
WASHER,CONROD SIDE (Ref # 10)	92026-093	
BEARING-SMALL END,KTV (Ref # 11)	13033-1055	
GEAR,PRIMARY,26T (Ref # 12)	13097-1019	
GEAR,PRIMARY SPUR (Ref # 12)	13097-1046	
WASHER,LOCK,18M/M (Ref # 13)	464H1800	
WOODRUFF KEY (Ref # 14)	510A5100	
NUT 18MM (Ref # 15)	92015-019	
WASHER LOCK 18MM (Ref # 16)	92024-015	
"0" RING,30MM (Ref # 17)	92055-1047	
COLLAR (Ref # 18)	92027-1285	
CONNECTING ROD ASSY (Ref # 19)	13044-5011	
WOODRUFF KEY (Ref # 20)	92038-001	

© 2025 Kawasaki Motors Corp., U.S.A.