1975 Mach II PARTS DIAGRAM

WHEELS/TIRES

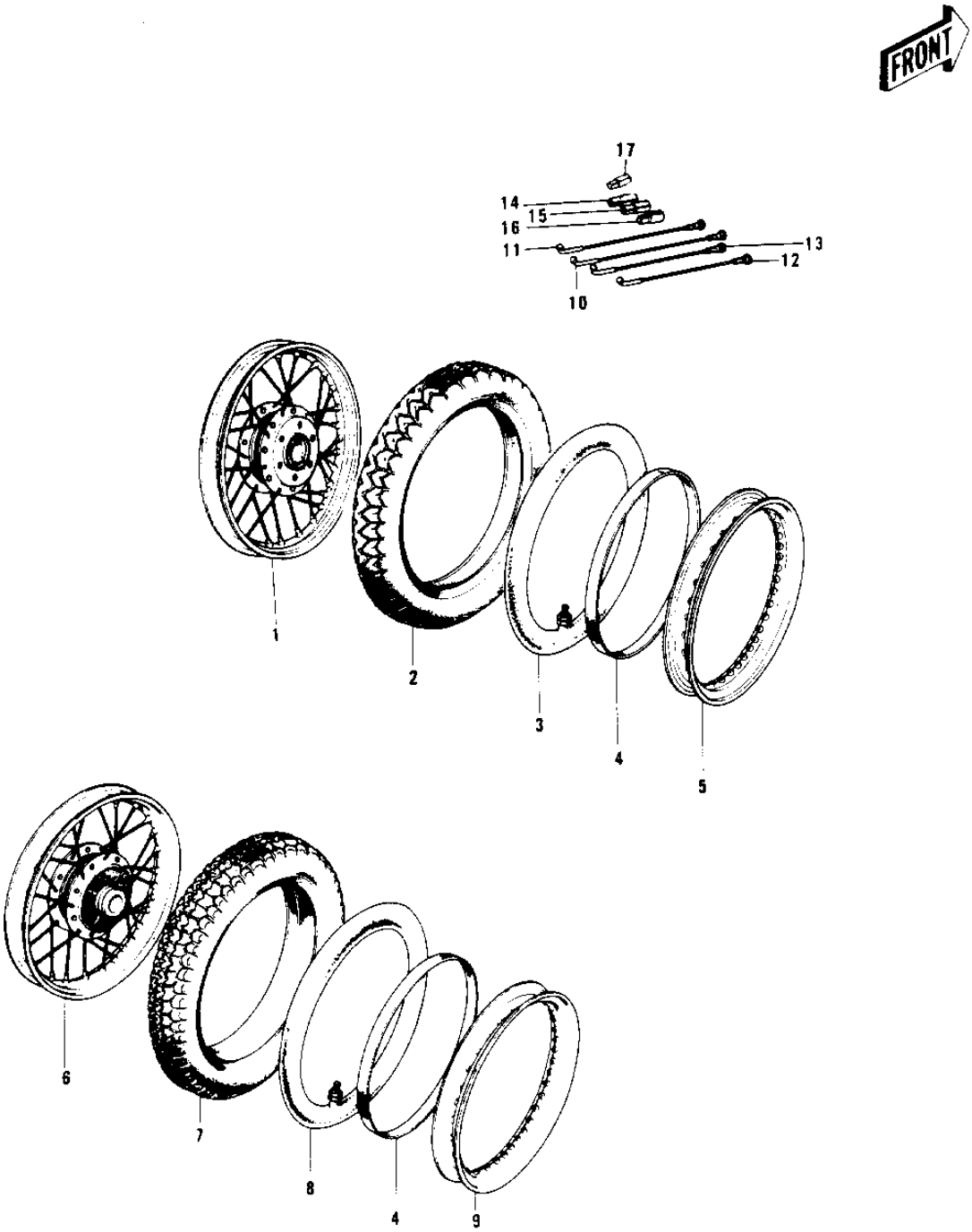

© 2025 Kawasaki Motors Corp., U.S.A.

1975 Mach II PARTS LIST

WHEELS/TIRES

ITEM NAME	PART NUMBER	QUANTITY
WHEEL ASSY,FRONT (Ref # 1)	41074-048	
UNAVAILABLE IN PRICE BOOK (Ref # 2)	41021-055	
TIRE 325S-18 Y984C F (Ref # 2)	41002-1011	
TIRE 325S-18 Y984C F (Ref # 2)	41002-1011	
TUBE 300/325/360-18 (Ref # 3)	41022-028	
BAND,RIM,4.00/5.10-18 (Ref # 4)	41023-1006	
RIM.1.85BX18 (Ref # 5)	41025-075	
WHEEL ASSY,REAR (Ref # 6)	42048-036	
WHEEL ASSY,REAR (Ref # 6)	42048-031	
UNAVAILABLE IN PRICE BOOK (Ref # 7)	41021-056	
TIRE 350S-18 Y987C R (Ref # 7)	41002-1012	
TIRE 350S-18 Y987C R (Ref # 7)	41002-1012	
*** N.L.A.*** (Canada) (Ref # 8)	41022-027	
TUBE 300/325/360-18 (Ref # 8)	41022-028	
RIM,1.85BX18W (Ref # 9)	41025-053	
SPOKE-ASY,FR INNER (Ref # 10)	41027-054	
SPOKE-ASY,FR OUTER (Ref # 11)	41028-054	
SPOKE-ASY,RR INNER (Ref # 12)	41027-046	
SPOKE-ASY,RR OUTER (Ref # 13)	41028-045	
WEIGHT,BALANCE,10G (Ref # 14)	41075-1007	
WEIGHT,BALANCE,10G (Ref # 14)	41075-1007	
WEIGHT,BALANCE,20G (Ref # 15)	41075-1008	
WEIGHT,BALANCE,20G (Ref # 15)	41075-1008	
WEIGHT,BALANCE,30G (Ref # 16)	41075-1009	
WEIGHT,BALANCE,30G (Ref # 16)	41075-1009	
WEIGHT,BALANCE,5G (Ref # 17)	41075-1010	
WEIGHT,BALANCE,5G (Ref # 17)	41075-1010	

© 2025 Kawasaki Motors Corp., U.S.A.