1975 Mach II PARTS DIAGRAM

FRONT BRAKE

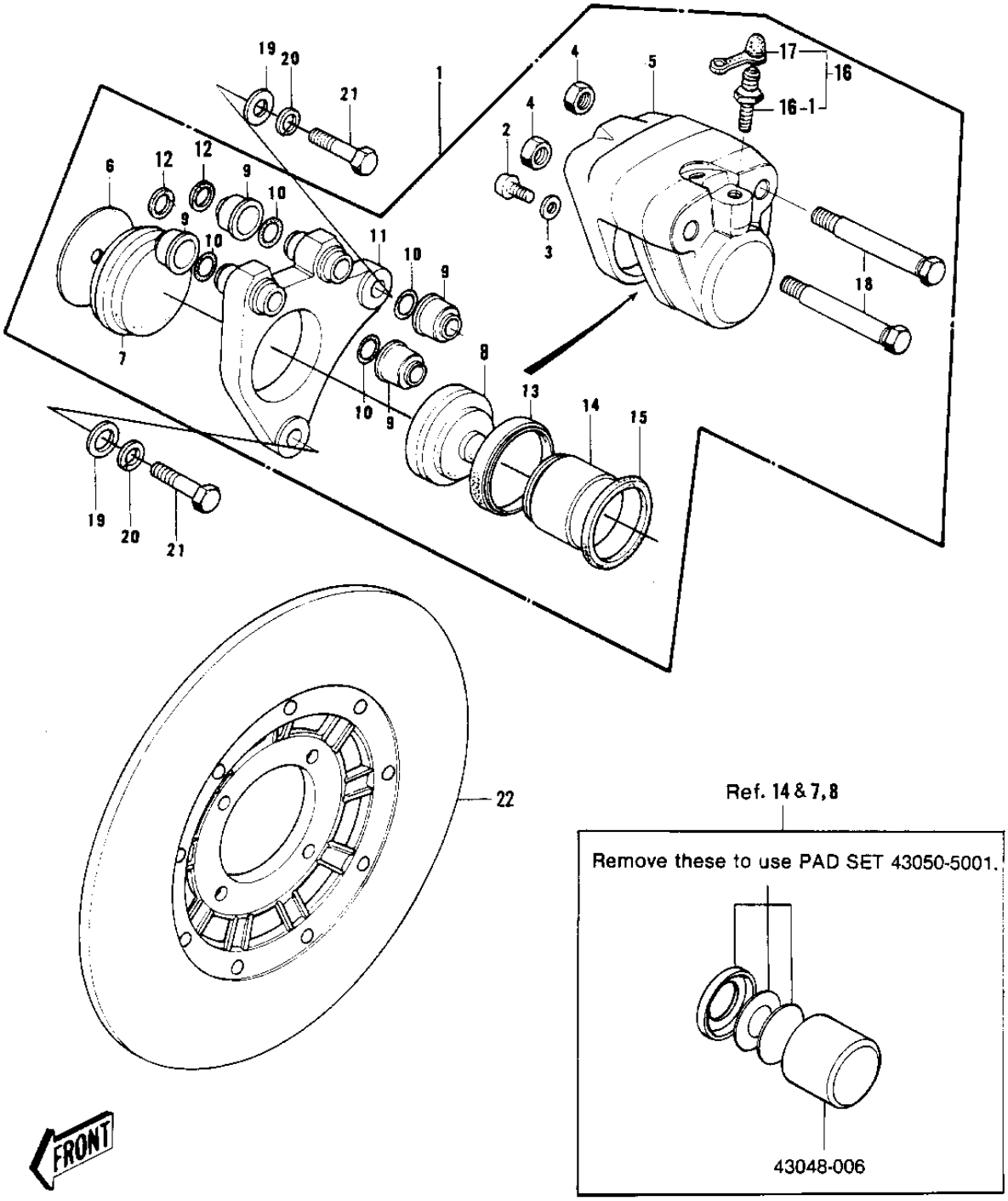

© 2025 Kawasaki Motors Corp., U.S.A.

1975 Mach II PARTS LIST

FRONT BRAKE

ITEM NAME	PART NUMBER	QUANTITY

© 2025 Kawasaki Motors Corp., U.S.A.