1975 Mach II PARTS DIAGRAM

CLUTCH ('76-'78 A3/A4/A5)

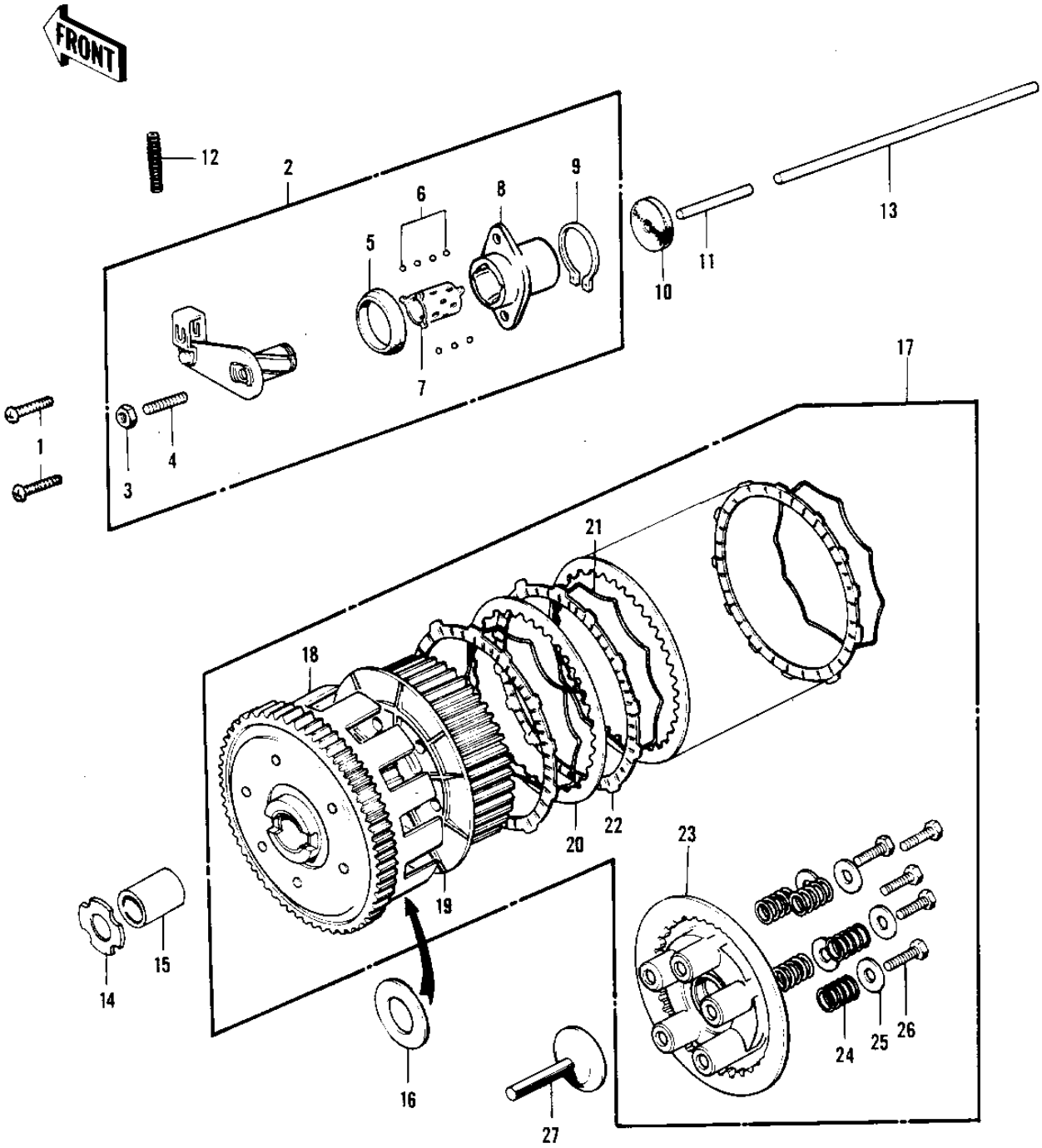

© 2025 Kawasaki Motors Corp., U.S.A.

1975 Mach II PARTS LIST

CLUTCH ('76-'78 A3/A4/A5)

ITEM NAME	PART NUMBER	QUANTITY
SCREW PAN HEAD 6X16 (Ref # 1)	220B0616	
RELEASE ASSY,CLUTCH (Ref # 2)	13231-1001	
RELEASE ASSY,CLUTCH (Ref # 2)	13231-1001	
NUT 6MM (Ref # 3)	311B0600	
SCREW SLOTTED (Ref # 4)	291Z0625	
OIL SEAL (Ref # 5)	92056-007	
BALL,STEEL,1/8" (Ref # 6)	600A0400	
RETAINER (Ref # 7)	13197-006	
OUTER,CLUTCH RELEASE (Ref # 8)	13118-015	
CIRCLIP 15MM (Ref # 9)	480J1500	
OIL SEAL TC7297 (Ref # 10)	92050-040	
ROD CLUTCH PUSH SHORT (Ref # 11)	13116-010	
SPRING-CLUTCH RELEASE (Ref # 12)	92081-096	
ROD-CLUTCH PUSH,LONG (Ref # 13)	13116-019	
WASHER THRUST (Ref # 14)	92022-119	
BUSH CLUTCH (Ref # 15)	92028-045	
WASHER-PLAIN,20MM (Ref # 16)	92022-189	
CLUTCH-ASSY (Ref # 17)	13081-1070	
CLUTCH-ASSY (Ref # 17)	13081-1070	
CLUTCH-ASSY (Ref # 17)	13081-1070	
HOUSING-COMP-CLUTCH (Ref # 18)	13095-1040	
HOUSING-COMP-CLUTCH (Ref # 18)	13095-1040	
HUB,CLUTCH (Ref # 19)	13087-036	
PLATE CLUTCH STEEL (Ref # 20)	13089-003	
RING-CLUTCH STEEL (Ref # 21)	13229-002	
PLATE-FRICTION (Ref # 22)	13088-1015	
PLATE-CLUTCH SPRING (Ref # 23)	13187-004	
SPRING-CLUTCH (Ref # 24)	92081-095	
WASHER-PLAIN,5MM (Ref # 25)	92022-167	

© 2025 Kawasaki Motors Corp., U.S.A.