1975 Mach II PARTS DIAGRAM

OWNER TOOLS ('74-'75 S3/S3-A)

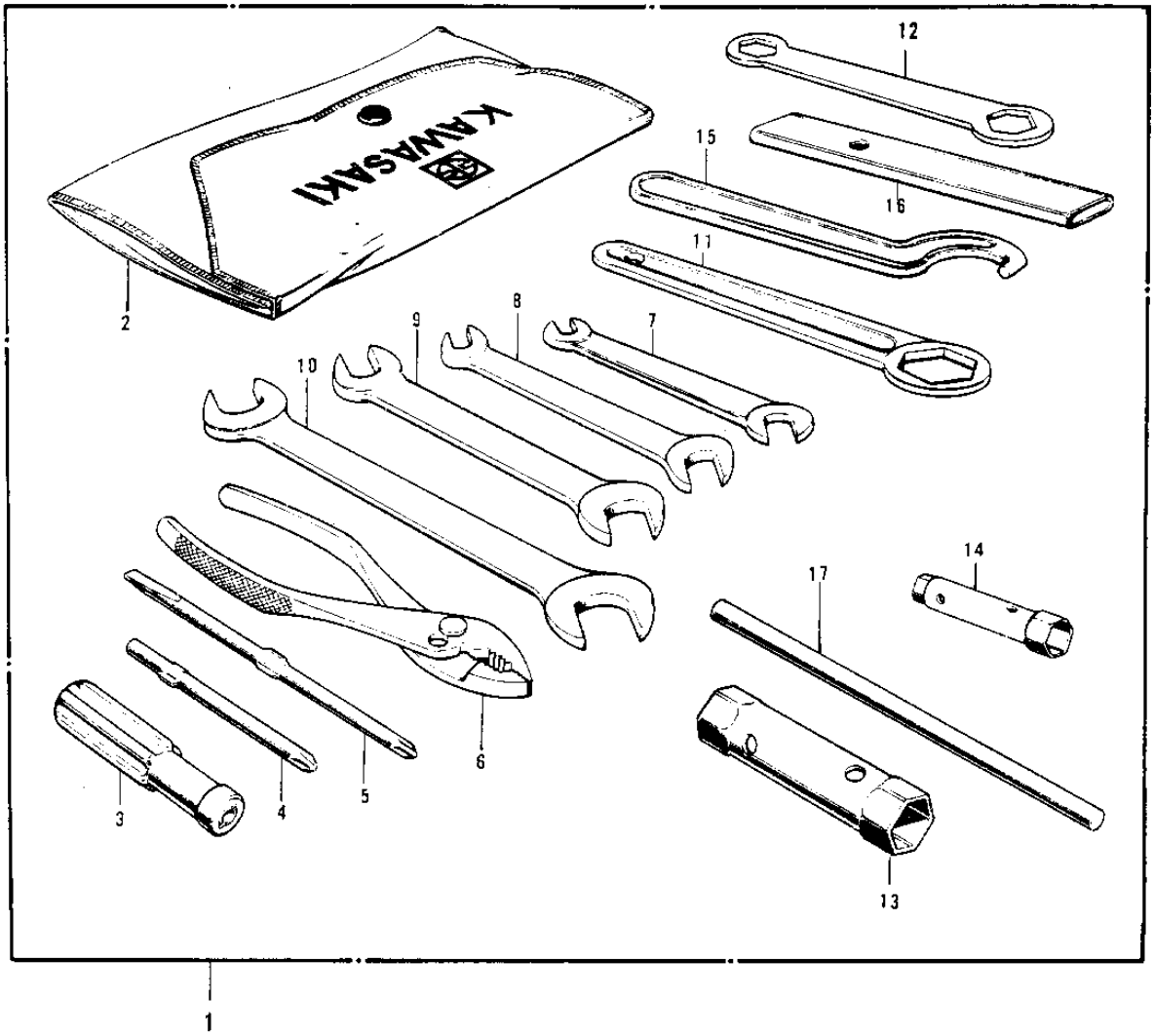

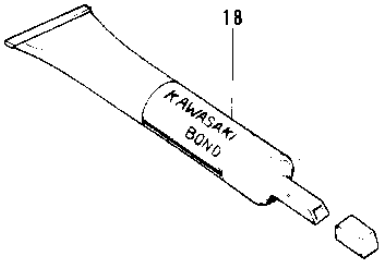

© 2024 Kawasaki Motors Corp., U.S.A.

1975 Mach II PARTS LIST

OWNER TOOLS ('74-'75 S3/S3-A)

ITEM NAME	PART NUMBER	QUANTITY
TOOL KIT (Ref # 1)	56007-037	
*** N.L.A.*** (Canada) (Ref # 1)	56007-028	
BAG,TOOL (Ref # 2)	56008-008	
92106-1001 (Canada) (Ref # 3)	92106-002	
SCREW DRIVER #3 PHLIP (Ref # 4)	92107-005	
TOOL-DRIVER (Ref # 5)	92107-1052	
PLIERS,160MM (Ref # 6)	92112-003	
WRENCH,OPEN,8X10 (Ref # 7)	92126-001	
WRENCH,OPEN END,12X13 (Ref # 8)	92126-002	
TOOL-WRENCH,OPEN END, (Ref # 9)	92110-1153	
92110-1010 (Canada) (Ref # 10)	92126-007	
WRENCH,BOX,32MM (Ref # 11)	92108-010	
TOOL-WRENCH,BOX END,2 (Ref # 11)	92110-1147	
92110-1022 (Canada) (Ref # 12)	92108-009	
WRENCH,BOX,17X21 (Ref # 13)	92110-012	
WRENCH BOX 10MM (Ref # 14)	92110-007	
92110-1035 (Canada) (Ref # 15)	92108-007	
BAR, WRENCH (Ref # 16)	92111-004	
BAR,SPARK PLUG WRENCH (Ref # 17)	92111-005	
LIQUID GASKET (Ref # 18)	92104-002	

© 2024 Kawasaki Motors Corp., U.S.A.