1970 Big Horn PARTS DIAGRAM

FRAME/FRAME FITTINGS

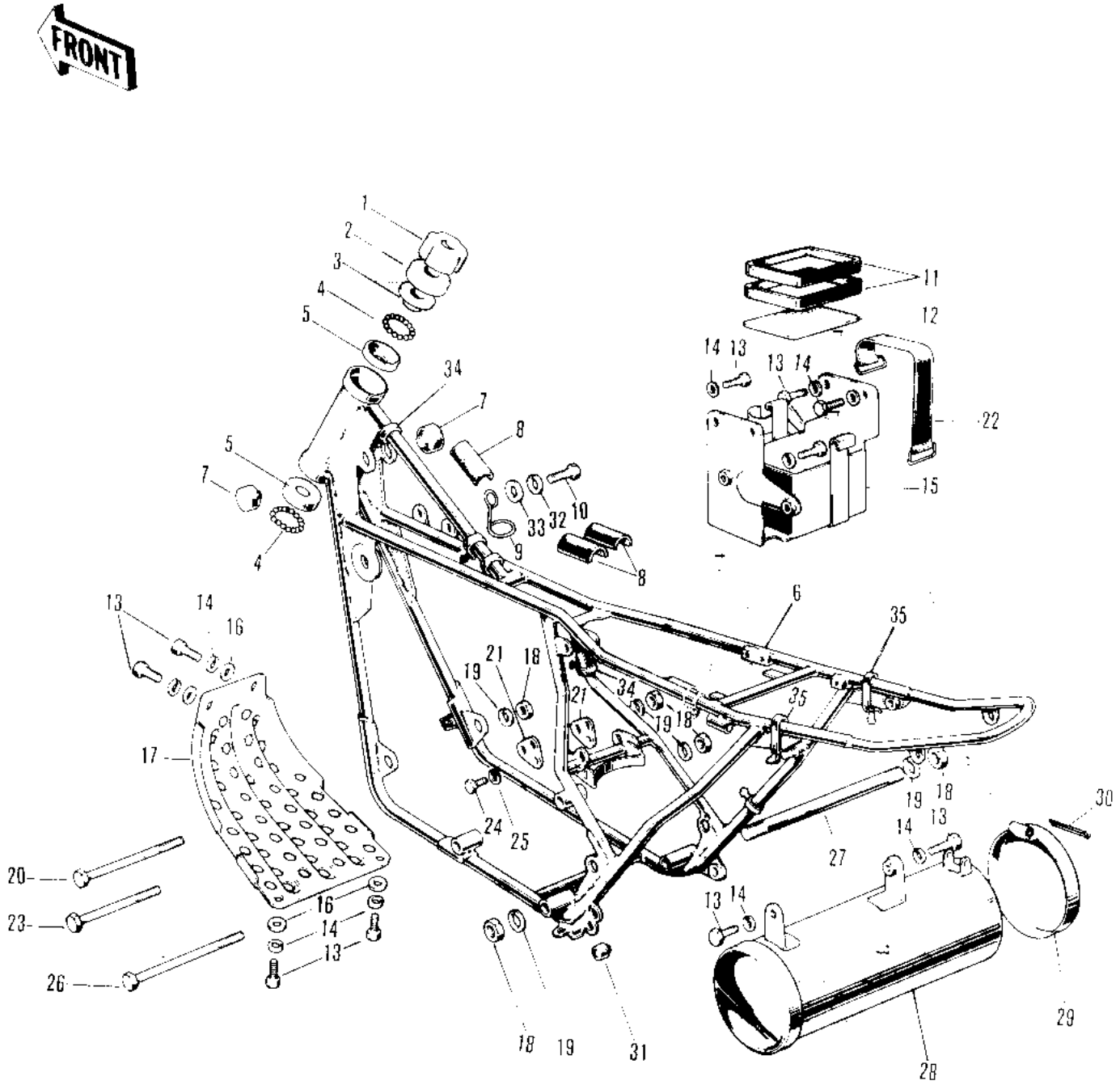

© 2024 Kawasaki Motors Corp., U.S.A.

1970 Big Horn PARTS LIST

FRAME/FRAME FITTINGS

ITEM NAME	PART NUMBER	QUANTITY
NUT STEERING STEM LCK (Ref # 1)	92090-006	1
CAP STEERING STEM (Ref # 2)	46098-005	1
CONE STERNG BERG UPP (Ref # 3)	92047-003	1
BALL STEEL 1/4' (Ref # 4)	600A0800	38
RACE STEERING BEARING (Ref # 5)	92048-005	2
FRAME (Ref # 6)	32002-032	1
DAMPER RUBB FUEL TANK (Ref # 7)	92075-050	2
MAT FUEL TANK (Ref # 8)	51067-002	3
CLAMP (Ref # 9)	92037-108	1
BOLT,6X10 (Ref # 10)	112G0610	1
PROTECTOR-BATTERY (Ref # 11)	32103-018	2
MAT-BATTERY (Ref # 12)	32103-017	1
BOLT-UPSET,6X12 (Ref # 13)	112G0612	10
WASHER SPRING 6MM (Ref # 14)	461F0600	10
CASE-BATTERY (Ref # 15)	32097-016	1
WASHER 6.5X20X1.6T (Ref # 16)	92022-125	4
GUARD-ENGINE (Ref # 17)	55011-011	1
NUT-HEX-FINE (Ref # 18)	314B1200	5
WASHER SPRING 12MM (Ref # 19)	461F1200	5
BOLT-HEX HEAD,12X163 (Ref # 20)	113B12163A	1
PLATE-ENGINE MOUNT (Ref # 21)	32030-020	2
BAND TOOL (Ref # 22)	92072-012	1
BOLT-HEX HEAD,12X151 (Ref # 23)	113B12151A	1
BOLT,8X20 (Ref # 24)	115G0820	4
WASHER SPRING 8MM (Ref # 25)	461F0800	4
BOLT HEX HEAD 12X254 (Ref # 26)	113B12254A	1
STUD (Ref # 27)	92006-002	1
BOX-TOOL (Ref # 28)	32098-012	(1
BOX-TOOL (Ref # 28)	32098-014	1

© 2024 Kawasaki Motors Corp., U.S.A.

1970 Big Horn PARTS LIST

FRAME/FRAME FITTINGS

ITEM NAME	PART NUMBER	QUANTITY
CAP-TOOL CASE (Ref # 29)	32099-005	1
PIN COTTER 2.0X30 (Ref # 30)	550D2030	1
PLUG RUBBER (Ref # 31)	92074-005	1
WASHER SPRING 6MM (Ref # 32)	461F0600	1
WASHER PLAIN 6MM (Ref # 33)	410B0600	1
BAND RUBBER (Ref # 34)	92072-013	6
BAND RUBBER (Ref # 35)	92072-018	3

© 2024 Kawasaki Motors Corp., U.S.A.