1970 Avenger

PARTS DIAGRAM

MUFFLER/SPARK ARRESTER A1SS-B, A7SS-B

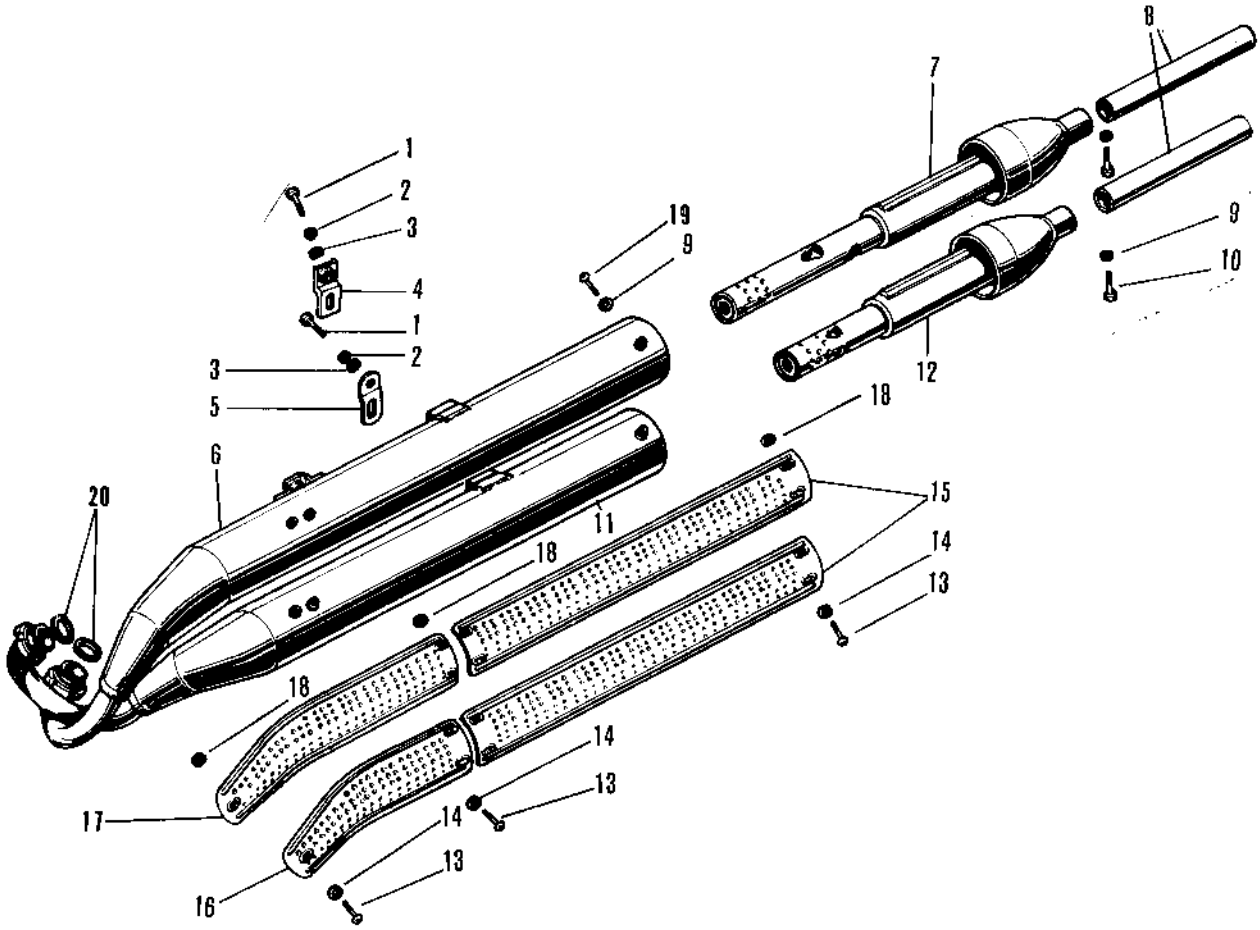

© 2026 Kawasaki Motors Corp., U.S.A.

1970 Avenger

PARTS LIST

MUFFLER/SPARK ARRESTER A1SS-B, A7SS-B

Kawasaki
Let the Good Times Roll®

ITEM NAME	PART NUMBER	QUANTITY
BOLT,8X20 (Ref # 1)	115G0820	2
WASHER SPRING 8MM (Ref # 2)	461F0800	2
WASHER PLAIN 8MM (Ref # 3)	410B0800	2
BRACKET UPPER MUFFLER (Ref # 4)	18061-007	1
BRACKET LOWER MUFFLER (Ref # 5)	18061-008	1
MUFFLER ASY-UPP,BLACK (Ref # 6~10)	18002-074-21	1
MUFFLER ASY-LOW,BLACK (Ref # 8~12)	18003-034-21	1
SPARK ARRESTOR COMP U (Ref # 7)	18033-020	1
BAFFLE TUBE (Ref # 8)	18033-023	2
WASHER SPRING 6MM (Ref # 9)	461F0600	4
BOLT,6X10 (Ref # 10)	112G0610	2
SPARK ARRESTOR COMP L (Ref # 12)	18033-022	1
SCREW PAN HEAD 6X8 (Ref # 13)	220E0608	14
WASHER PLAIN 6MM (Ref # 14)	411B0600	14
COVER-RR MUFFLR,BLACK (Ref # 15)	18057-040-21	2
COVER-LOW MUFLR,BLACK (Ref # 16)	18057-039-21	1
COVER-UPP MUFLR,BLACK (Ref # 17)	18057-038-21	1
INSULATOR HEAT (Ref # 18)	18065-002	14
SCREW PAN HEAD 6X10 (Ref # 19)	220B0610	2
GASKET EXHAUST PIPE (Ref # 20)	18067-008	2

© 2026 Kawasaki Motors Corp., U.S.A.