1978 KX250-A4 PARTS DIAGRAM

OWNER TOOLS/SPECIAL SERVICE TOOLS (78-79

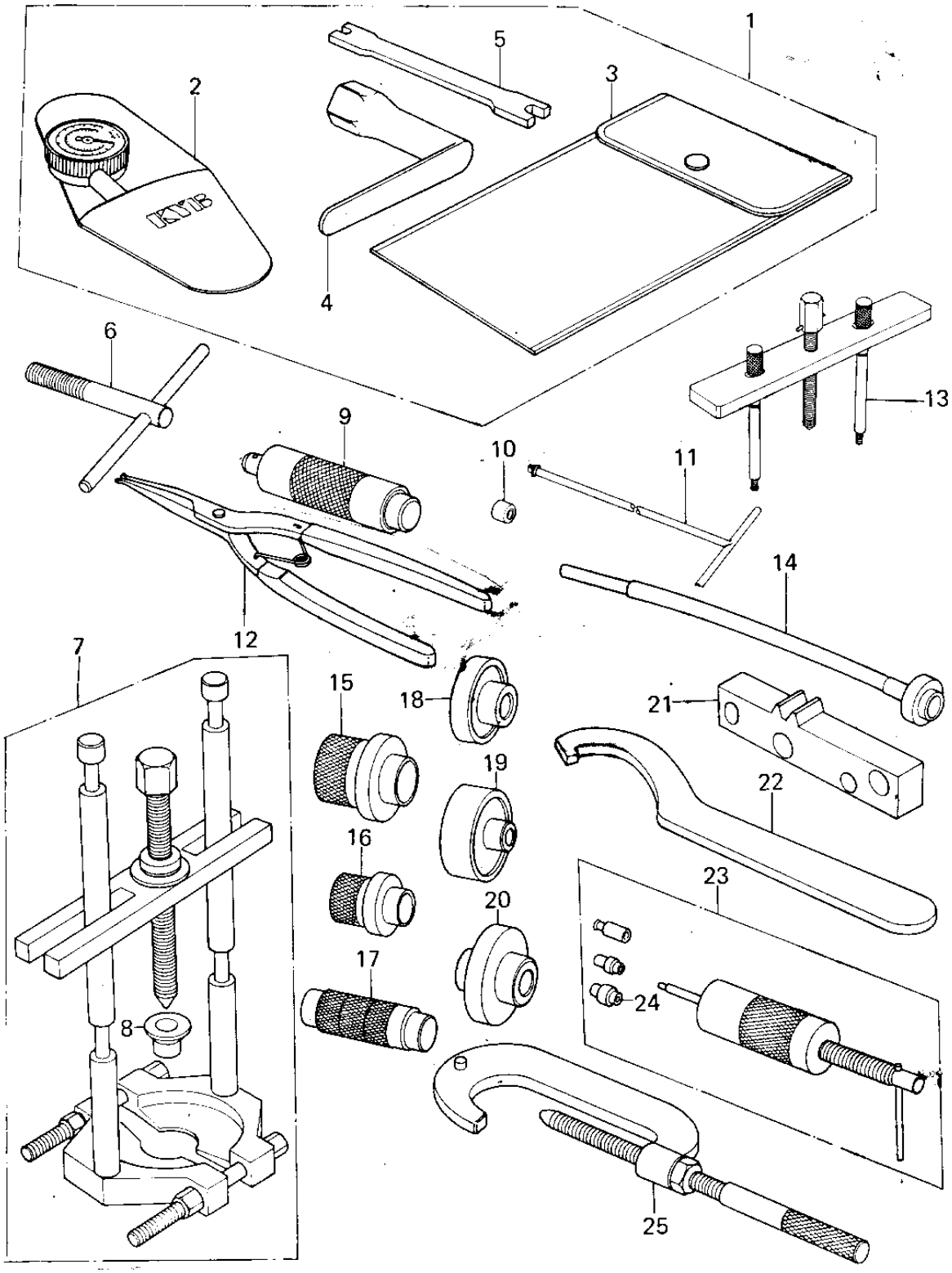

© 2024 Kawasaki Motors Corp., U.S.A.

1978 KX250-A4 PARTS LIST

OWNER TOOLS/SPECIAL SERVICE TOOLS (78-79

ITEM NAME	PART NUMBER	QUANTITY
TOOL KIT (Ref # 1)	56007-1010	1
GAUGE,AIR (Ref # 2)	52005-1003	1
BAG,TOOL (Ref # 3)	56008-008	1
WRENCH,SPARK PLUG (Ref # 4)	92110-019	1
WRENCH SPOKE (Ref # 5)	92110-1016	1
57001-1216 (Canada) (Ref # 6)	57001-116	1
PULLER,STEM BEARING (Ref # 7)	57001-135	1
ADAPTER,STEM BEARING (Ref # 8)	57001-136	1
*** N.L.A.*** (Canada) (Ref # 9)	57001-139	1
ADAPTER-FRK CYL HLDR (Ref # 10)	57001-176	1
HANDLE,FORK CLY HOLDR (Ref # 11)	57001-183	1
PLIERS,CIRCLIP,OUTSID (Ref # 12)	57001-144	1
57001-1098 (Canada) (Ref # 13)	57001-153	1
*** N.L.A.*** (Canada) (Ref # 14)	57001-203	1
GUIDE,SHIFT OIL SEAL (Ref # 15)	57001-264	1
*** N.L.A.*** (Canada) (Ref # 16)	57001-265	1
57001-1129 (Canada) (Ref # 17)	57001-287	1
57001-1129 (Canada) (Ref # 18)	57001-289	1
57001-1129 (Canada) (Ref # 19)	57001-290	1
*** N.L.A.*** (Canada) (Ref # 20)	57001-296	1
57001-1243 (Canada) (Ref # 21)	57001-302	1
57001-1100 (Canada) (Ref # 22)	57001-321	1
PULLER-PISTON PIN (Ref # 23)	57001-910	1
ADAPTER C,PIN PULLER (Ref # 24)	57001-914	1
57001-1243 (Canada) (Ref # 25)	57001-307	1
57001-1243 (Canada) (Ref # 25)	57001-307	1

© 2024 Kawasaki Motors Corp., U.S.A.