1979 KLR250 PARTS DIAGRAM

WHEELS/TIRES ('78-'79 KL250-A1/A1A/A2)

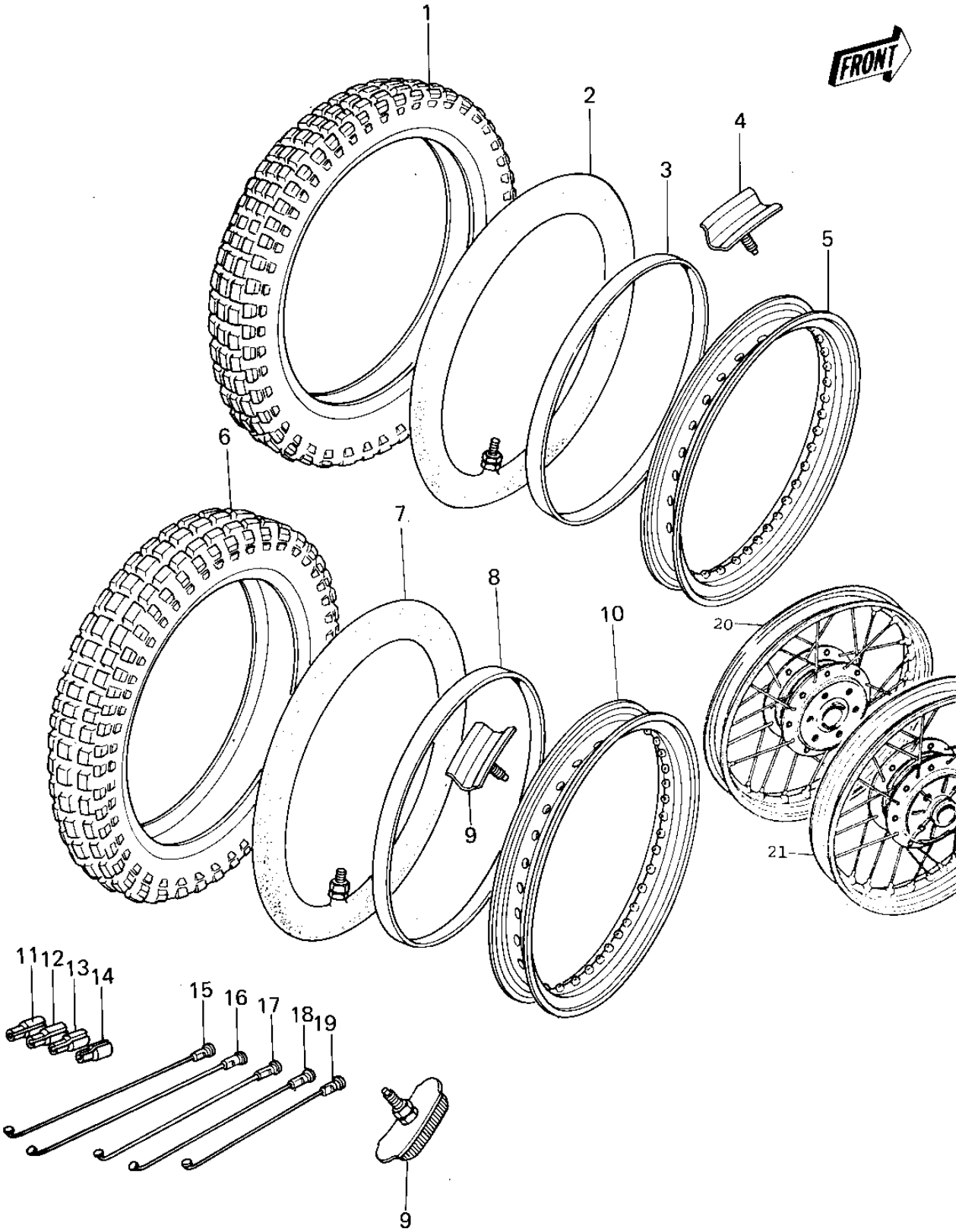

© 2024 Kawasaki Motors Corp., U.S.A.

1979 KLR250 PARTS LIST

WHEELS/TIRES ('78-'79 KL250-A1/A1A/A2)

ITEM NAME	PART NUMBER	QUANTITY
TIRE 300-21 TW7 F (Ref # 1)	41002-1017	1
TUBE,2.75/3.70-21 (Ref # 2)	41022-1021	1
BAND,RIM,3.00-21 (Ref # 3)	41023-1001	1
PROTECTOR-BEAD 1.60A (Ref # 4)	41024-006	1
RIM,1.60X21 (Ref # 5)	41025-089	1
TIRE 400-18 TW6 R (Ref # 6)	41002-1018	1
TUBE 350/375/410-18 (Ref # 7)	41022-031	1
BAND,RIM,4.00/5.10-18 (Ref # 8)	41023-1006	1
PROTECTOR-BEAD,2.15B (Ref # 9)	41024-008	2
RIM,2.15X18 (Ref # 10)	41025-090	1
WEIGHT,BALANCE,10G (Ref # 11)	41075-1007	AR
WEIGHT,BALANCE,20G (Ref # 12)	41075-1008	AR
WEIGHT,BALANCE,30G (Ref # 13)	41075-1009	AR
WEIGHT,BALANCE,5G (Ref # 14)	41075-1010	AR
SPOKE-ASY,FR INNER LH (Ref # 15)	41027-5004	9
SPOKE-ASY,FR OUTER LH (Ref # 16)	41028-5003	9
SPOKE-ASY,FR RH (Ref # 17)	41027-5003	18
SPOKE-ASY,RR INNER (Ref # 18)	41027-5007	18
SPOKE-ASY,RR OUTER (Ref # 19)	41028-5006	18
WHEEL ASSY,FRONT (Ref # 20)	41073-5004	1
WHEEL ASSY,REAR (Ref # 21)	41073-5020	1

© 2024 Kawasaki Motors Corp., U.S.A.