1978 KLR250 PARTS DIAGRAM

FOOTRESTS/STAND/BRAKE PEDAL

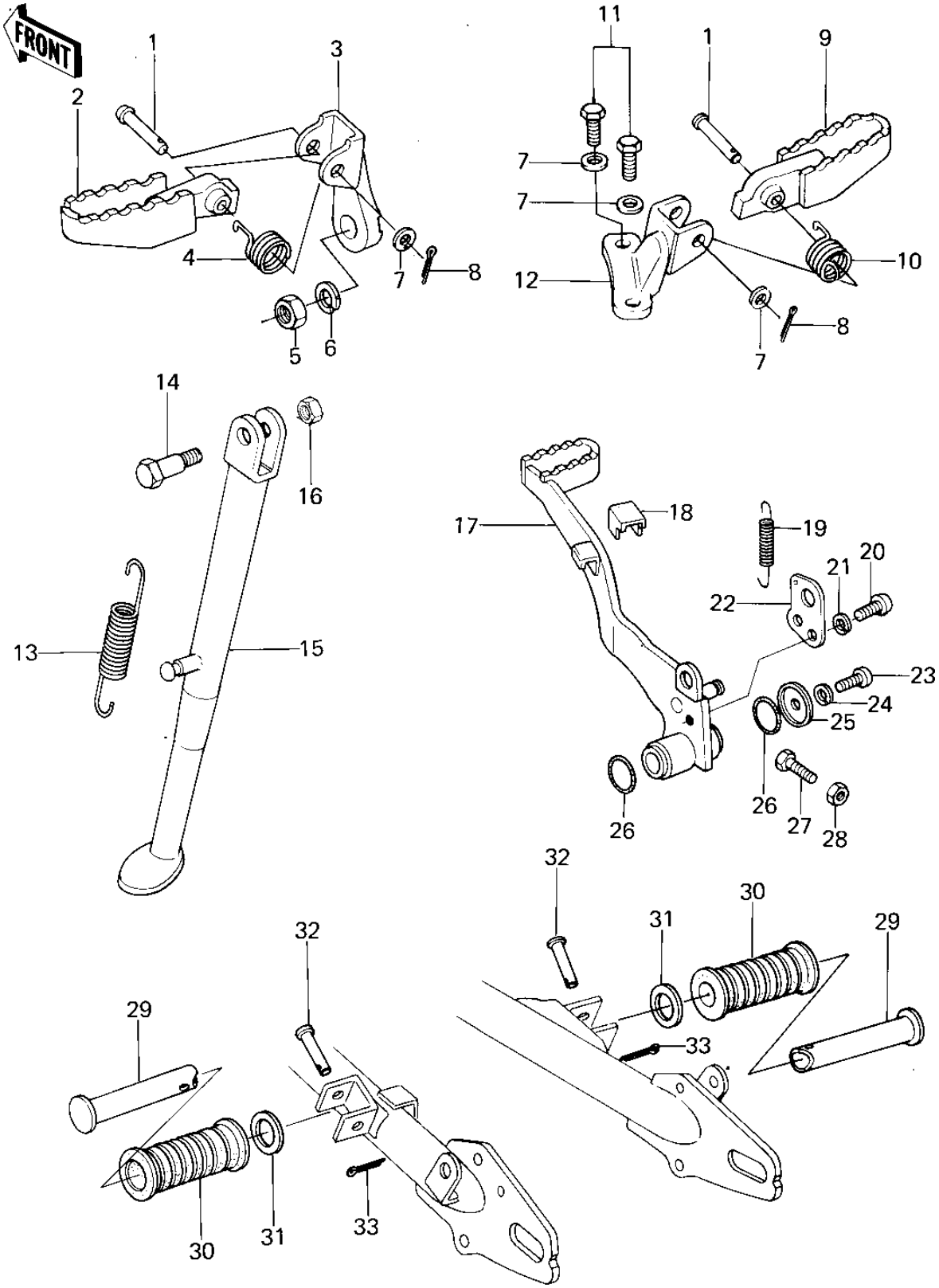

© 2024 Kawasaki Motors Corp., U.S.A.

1978 KLR250 PARTS LIST

FOOTRESTS/STAND/BRAKE PEDAL

ITEM NAME	PART NUMBER	QUANTITY
PIN,FOOTREST BAR FIT (Ref # 1)	92043-115	2
STEP,FOOTREST,L.H (Ref # 2)	34028-037	1
HOLDER,STEP,L.H. (Ref # 3)	34003-1001	1
SPRING,L.H,FOOTREST (Ref # 4)	92081-1254	1
NUT 14MM (Ref # 5)	315B1400	1
WASHER SPRING 14MM (Ref # 6)	461F1400	1
WASHER PLAIN 8MM (Ref # 7)	410B0800	4
PIN COTTER 2.5X16 (Ref # 8)	550D2516	2
STEP,FOOTREST,R.H (Ref # 9)	34028-038	1
SPRING,R.H,FOOTREST (Ref # 10)	92081-1255	1
BOLT-SMALL-UPSET,8X18 (Ref # 11)	115G0818	2
HOLDER,STEP,R.H. (Ref # 12)	34003-1002	1
SPRING,SIDE STAND (Ref # 13)	34025-008	1
BOLT, SIDE STAND FIT (Ref # 14)	92003-157	1
STAND-SIDE (Ref # 15)	34024-064	1
NUT,LOCK,10MM (Ref # 16)	92019-021	1
PEDAL,BRAKE (Ref # 17)	43001-5002	1
PEDAL,BRAKE (Ref # 17)	43001-1022	1
DAMPER RUBBER,BK PDL (Ref # 18)	92075-220	1
SPRING,BRAKE RETURN (Ref # 19)	92081-1044	1
SCREW,8X12 (Ref # 20)	220B0812	1
WASHER SPRING 8MM (Ref # 21)	461F0800	1
PLATE,BRAKE PEDAL (Ref # 22)	13169-1009	1
PLATE,BRAKE PEDAL (Ref # 22)	13169-1122	1
SCREW PAN HEAD 6X12 (Ref # 23)	220B0612	1
WASHER SPRING 6MM (Ref # 24)	461F0600	1
WASHER,PLAIN,6MM (Ref # 25)	92022-284	1
"0" RING,16MM (Ref # 26)	670B2016	2
BOLT-UPSET (Ref # 27)	112G0618	1

© 2024 Kawasaki Motors Corp., U.S.A.

1978 KLR250 PARTS LIST

FOOTRESTS/STAND/BRAKE PEDAL

ITEM NAME	PART NUMBER	QUANTITY
NUT 6MM (Ref # 28)	312B0600	2
BAR-RR FOOTREST (OPT) (Ref # 29)	34028-009	2
RUBBER,REAR FOOTREST (Ref # 30)	92076-024	2
WASHER-PLAIN (OPT) (Ref # 31)	92022-199	2
PIN (Ref # 32)	92043-1464	2
PIN COTTER 2.0X15 (Ref # 33)	550D2015	2

© 2024 Kawasaki Motors Corp., U.S.A.