1973 F11M PARTS DIAGRAM

HANDLEBAR

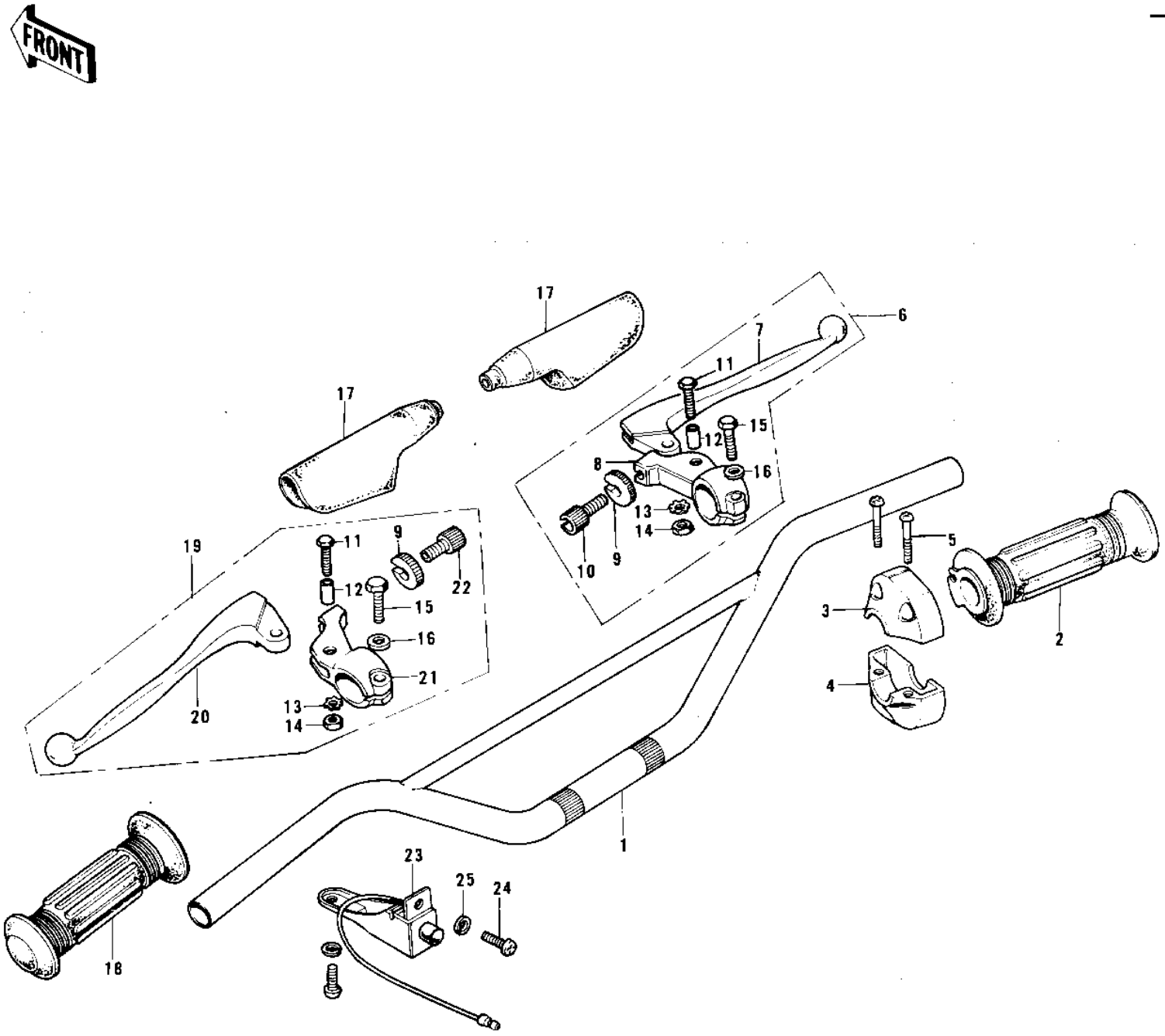

© 2025 Kawasaki Motors Corp., U.S.A.

1973 F11M PARTS LIST

HANDLEBAR

ITEM NAME	PART NUMBER	QUANTITY
UNAVAILABLE IN PRICE BOOK (Ref # 1)	46004-023	
GRIP ASSY,THROTTLE (Ref # 2)	46019-028	
CASE,R.H LOWER (Ref # 3)	46023-012	
CASE,R H UPPER (Ref # 4)	46041-012	
SCREW PAN HEAD 6X20 (Ref # 5)	220B0620	
LEVER ASSY,FRNT BRAK (Ref # 6)	46021-019	
LEVER FRONT BRAKE (Ref # 7)	46058-004	
HOLDER,FR BRAKE LEVE (Ref # 8)	46060-008	
NUT-LOCK (Ref # 9)	46056-005	
SCREW,CABLE ADJUST (Ref # 10)	46055-010	
BOLT HEX HEAD 5X20 (Ref # 11)	92007-020	
COLLAR LEVER (Ref # 12)	46059-011	
WASHER LOCK 5MM (Ref # 13)	464H0500	
NUT 5MM (Ref # 14)	312B0500	
BOLT HEX HEAD 6X25 (Ref # 15)	110N0625	
WASHER PLAIN 6MM (Ref # 16)	410B0600	
DUST COVER (Ref # 17)	46071-003	
RUBBER,L.H GRIP (Ref # 18)	46075-023	
LEVER ASSY,CLUTCH (Ref # 19)	46076-029	
LEVER-CLUTCH (Ref # 20)	46092-015	
HOLDER,CLUTCH LEVER (Ref # 21)	46094-010	
SCREW CABLE ADJUST (Ref # 22)	46055-003	
SWITCH ASSY-ENG STOP (Ref # 23)	46027-006	
SCREW-PAN-HEAD 3X6 (Ref # 24)	220B0306	
WASHER SPRING 3MM (Ref # 25)	461F0300	

© 2025 Kawasaki Motors Corp., U.S.A.