1973 F11M PARTS DIAGRAM

TURN SIGNALS

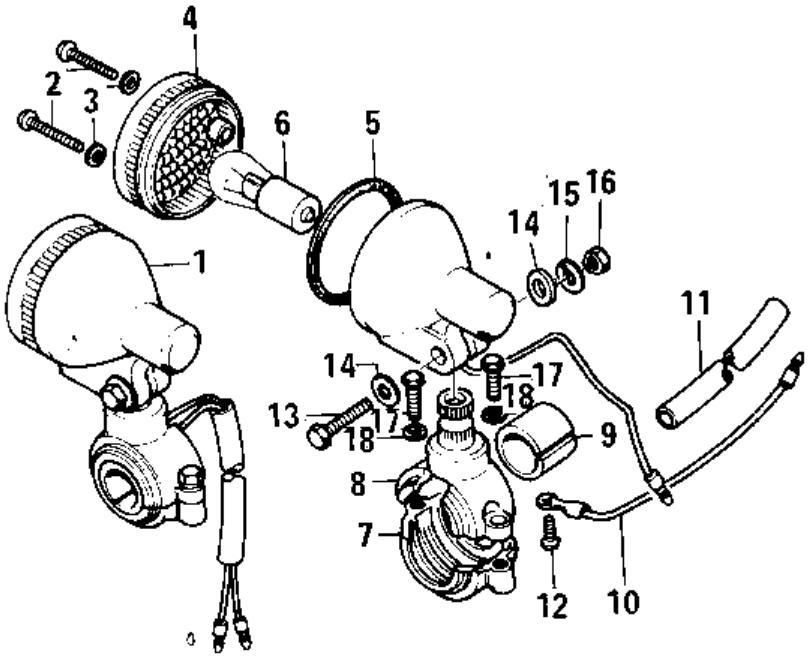

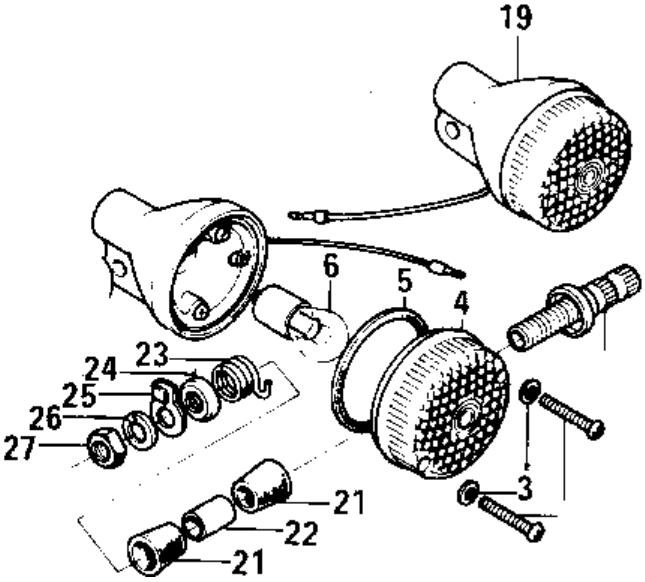

© 2025 Kawasaki Motors Corp., U.S.A.

1973 F11M PARTS LIST

TURN SIGNALS

ITEM NAME	PART NUMBER	QUANTITY
LAMP ASY-FR TURN SIG (Ref # 1)	23037-005	
SCREW-PAN HEAD,4X20 (Ref # 2)	220E0420A	
WASHER-PLAIN,4MM (Ref # 3)	23058-002	
LENS,TURN SIGNAL LAM (Ref # 4)	23048-1001	
GASKET-SIG LAMP LENS (Ref # 5)	23050-003	
BULB,6V 21CP (Ref # 6)	92069-056	
BRACKET,SIGNAL LAMP (Ref # 7)	23051-1013	
BRACKET,FRNT TURN SI (Ref # 8)	23051-1004	
DAMPER RUBBER (Ref # 9)	23066-003	
WIRE-TURN SIGNAL LEA (Ref # 10)	26011-061	
COVER-WIRING HARNESS (Ref # 11)	26009-004	
SCREW PAN HEAD 3X5 (Ref # 12)	220B0305A	
BOLT-UPSET (Ref # 13)	112G0630	
WASHER PLAIN 6MM (Ref # 14)	410B0600	
WASHER SPRING 6MM (Ref # 15)	461F0600	
NUT 6MM (Ref # 16)	311B0600	
BOLT (Ref # 17)	110N0516	
WASHER-PLAIN,5MM (Ref # 18)	410D0500	
LAMP-REAR TURN SIGNA (Ref # 19)	23040-033	
BKT-RR SIGNAL LAMP (Ref # 20)	23051-037	
DAMPER RUBBER (Ref # 21)	92075-148	
COLLAR 12.7X17.3X30 (Ref # 22)	92027-168	
SPRING (Ref # 23)	92081-111	
WASHER CUP 12.5X35X4 (Ref # 24)	92022-235	
CLAMP-RR SIGNAL LAMP (Ref # 25)	92037-087	
WASHER SPRING 12MM (Ref # 26)	461F1200	
NUT-HEX-FINE,12MM (Ref # 27)	315B1200	

© 2025 Kawasaki Motors Corp., U.S.A.