1973 F11M PARTS DIAGRAM

REAR HUB/BRAKE/CHAIN (F11)

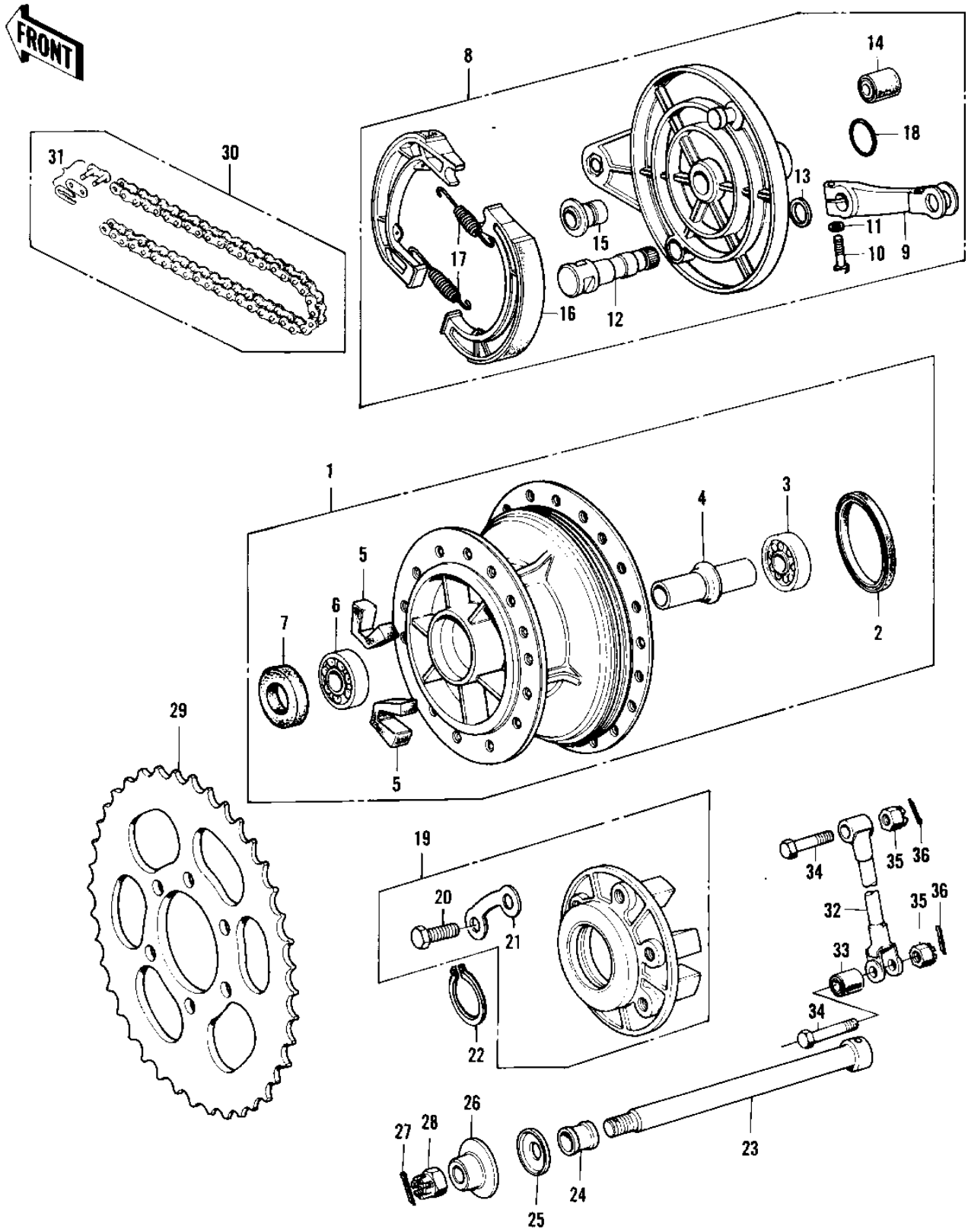

© 2025 Kawasaki Motors Corp., U.S.A.

1973 F11M PARTS LIST

REAR HUB/BRAKE/CHAIN (F11)

ITEM NAME	PART NUMBER	QUANTITY
DRUM ASY-RR BR,BUFF (Ref # 1)	42005-027-80	
.OIL SEAL,#50656 (Ref # 2)	657G506506	
.BALL BEARING,#6203ZC (Ref # 3)	601B6203Z	
.SPACER,RR BRAKE DRUM (Ref # 4)	42010-025	
.DAMPER-REAR HUB SHOC (Ref # 5)	42014-020	
.BEARING BALL #6203 (Ref # 6)	601B6203	
.OIL SEAL-COUPLING (Ref # 7)	92052-003	
PANEL-ASY,RR BRK,BLK (Ref # 8)	42006-023-21	
.LEVER-BRAKE CAM (Ref # 9)	42029-018	
.BOLT-UPSET (Ref # 10)	112G0625	
.WASHER PLAIN 6MM (Ref # 11)	410B0600	
.CAMSHAFT,REAR BRAKE (Ref # 12)	42026-022	
CAMSHAFT,REAR BRAKE (Ref # 12)	42026-022	
.DUST SHIELD BRAKE CA (Ref # 13)	41051-001	
.BUSH-RR BRK PEDAL RU (Ref # 14)	92092-008	
.COLLAR-REAR HUB (Ref # 15)	42032-032	
.SHOE,BRAKE (Ref # 16)	42019-011	
SHOE,BRAKE (Ref # 16)	42019-011	
.SPRING-BRAKE SHOE (Ref # 17)	42020-004	
."0" RING,34MM (Ref # 18)	670B3034	
COUPLING ASSY,RR-BLK (Ref # 19)	42008-011-21	
.BOLT-REAR SPROCKET (Ref # 20)	92001-109	
.WASHER LOCK (Ref # 21)	92088-007	
.CIRCLIP,52MM (Ref # 22)	480J5200	
AXLE-REAR (Ref # 23)	42031-031	
COLLAR-REAR AXLE,R.H (Ref # 24)	42032-035	
DUST-SHIELD-CAM SHAF (Ref # 25)	41042-010	
COLLAR-REAR AXLE,L.H (Ref # 26)	42032-034	
PIN-COTTER,4.0X35 (Ref # 27)	550D4035	

© 2025 Kawasaki Motors Corp., U.S.A.

1973 F11M PARTS LIST

REAR HUB/BRAKE/CHAIN (F11)

ITEM NAME	PART NUMBER	QUANTITY
NUT CASTLE,16MM (Ref # 28)	92015-055	
REAR SPROCKET 44T (Ref # 29)	42041-107	
REAR SPROCKET 42T (Ref # 29)	42041-116	
REAR SPROCKET 46T (Ref # 29)	42041-117	
UNAVAILABLE IN PRICE BOOK (Ref # 30)	92057-013	
DR CHAIN 525X100 (Ref # 30)	92057-037	
.CHAIN JOINT 525 (Ref # 31)	92058-006	
TORQUE LINK-REAR BRK (Ref # 32)	43007-030	
BUSH-RR BRK PEDAL RU (Ref # 33)	92092-008	
BOLT-HEX HEAD,10X42 (Ref # 34)	92003-085	
NUT CASTLE 10MM (Ref # 35)	321B1000	
PIN COTTER 2.5X20 (Ref # 36)	550D2520	

© 2025 Kawasaki Motors Corp., U.S.A.