1973 F11M PARTS DIAGRAM

FRONT HUB/BRAKE ('73-'75 F11/F11-A/F11-B

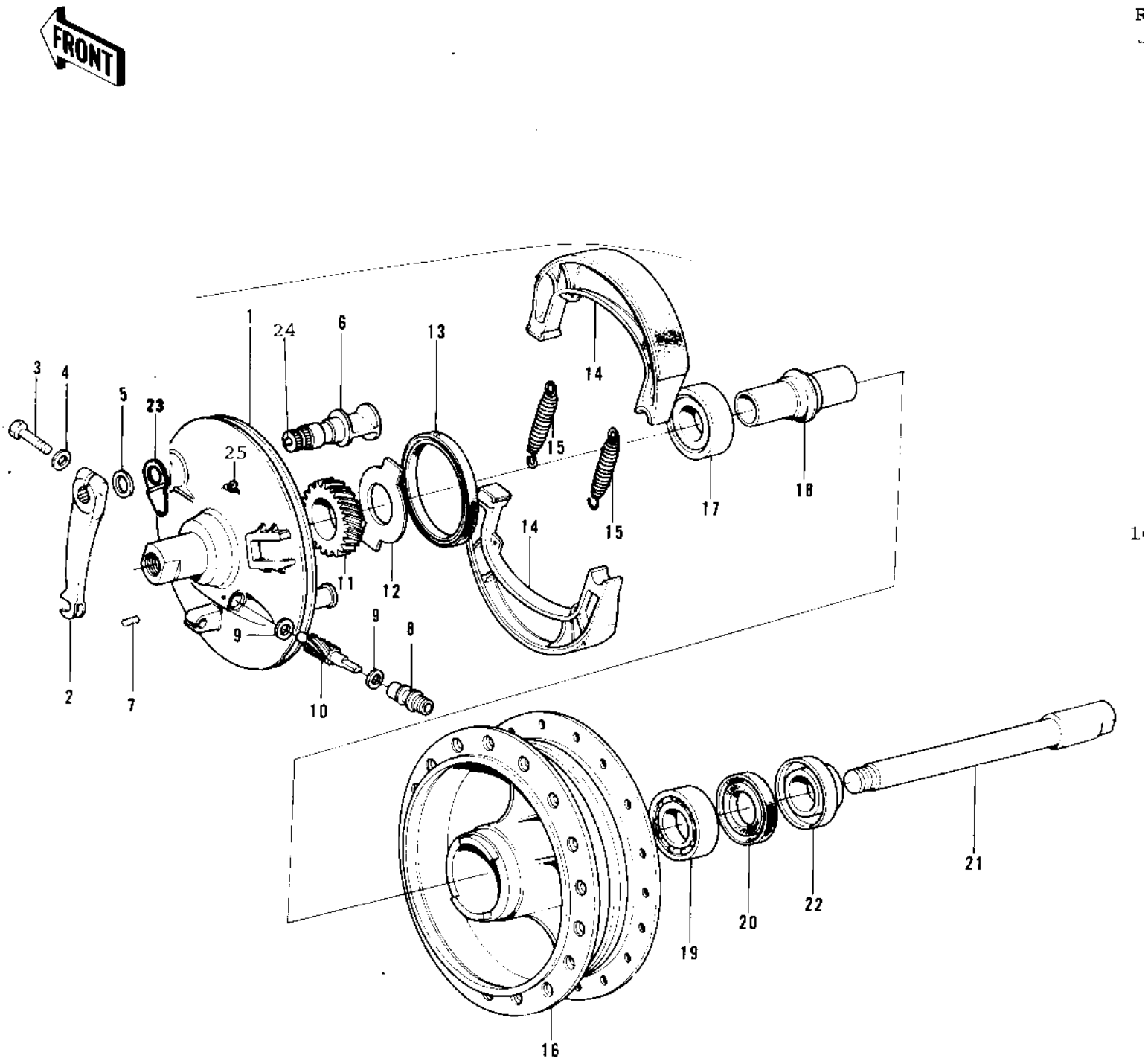

© 2025 Kawasaki Motors Corp., U.S.A.

1973 F11M PARTS LIST

FRONT HUB/BRAKE ('73-'75 F11/F11-A/F11-B

ITEM NAME	PART NUMBER	QUANTITY
PANEL-ASY,FR BRK BLK (Ref # 1~15)	41035-038-21	
PANEL-ASY,FR BRK BUF (Ref # 1~15)	41035-045-80	
LEVER-BRAKE CAM (Ref # 2)	41053-017	
BOLT-UPSET (Ref # 3)	112G0625	
BOLT-UPSET (Ref # 3)	112G0625	
WASHER PLAIN 6MM (Ref # 4)	410B0600	
DUST SHIELD BRAKE CA (Ref # 5)	41051-001	
CAMSHAFT,REAR BRAKE (Ref # 6)	42026-022	
CAM SHAFT,FRONT BRAK (Ref # 6)	41050-015	
SCREW-BUSHING NET (Ref # 7)	41070-004	
PIN,SPRING (Ref # 7)	41082-001	
BUSH SPEEDMETER CABL (Ref # 8)	41062-001	
BUSH,SPEEDMETER CABL (Ref # 8)	41062-005	
WASHER THRST SPD PIN (Ref # 9)	41063-001	
PINION-SPEEDOMETER (Ref # 10)	41060-010	
GEAR-SPEEDOMETER (Ref # 11)	41059-011	
RECIEVER GEAR (Ref # 12)	41064-003	
OIL SEAL F BRK PANEL (Ref # 13)	92050-010	
SHOE,BRAKE (Ref # 14)	42019-011	
SPRING-BRAKE SHOE (Ref # 15)	42020-004	
DRUM-ASSY,FR BRK,BUF (Ref # 16~20)	41034-023-80	
BEARING BALL #6202Z (Ref # 17)	601B6202Z	
SPACER-FRONT HUB BER (Ref # 18)	41039-020	
BEARING BALL #6202 (Ref # 19)	601B6202	
OIL SEAL RR BRK DRUM (Ref # 20)	92050-008	
AXLE-FRONT (Ref # 21)	41068-037	
COLLAR-FRONT AXLE (Ref # 22)	41069-019	
INDICATOR,FR BRK PNL (Ref # 23)	41085-005	
GREASE NIPPLE (Ref # 24)	92080-002	

© 2025 Kawasaki Motors Corp., U.S.A.