1973 F11M PARTS DIAGRAM

AIR CLEANER/MUFFLER ('73-'75 F11/F11-A/F

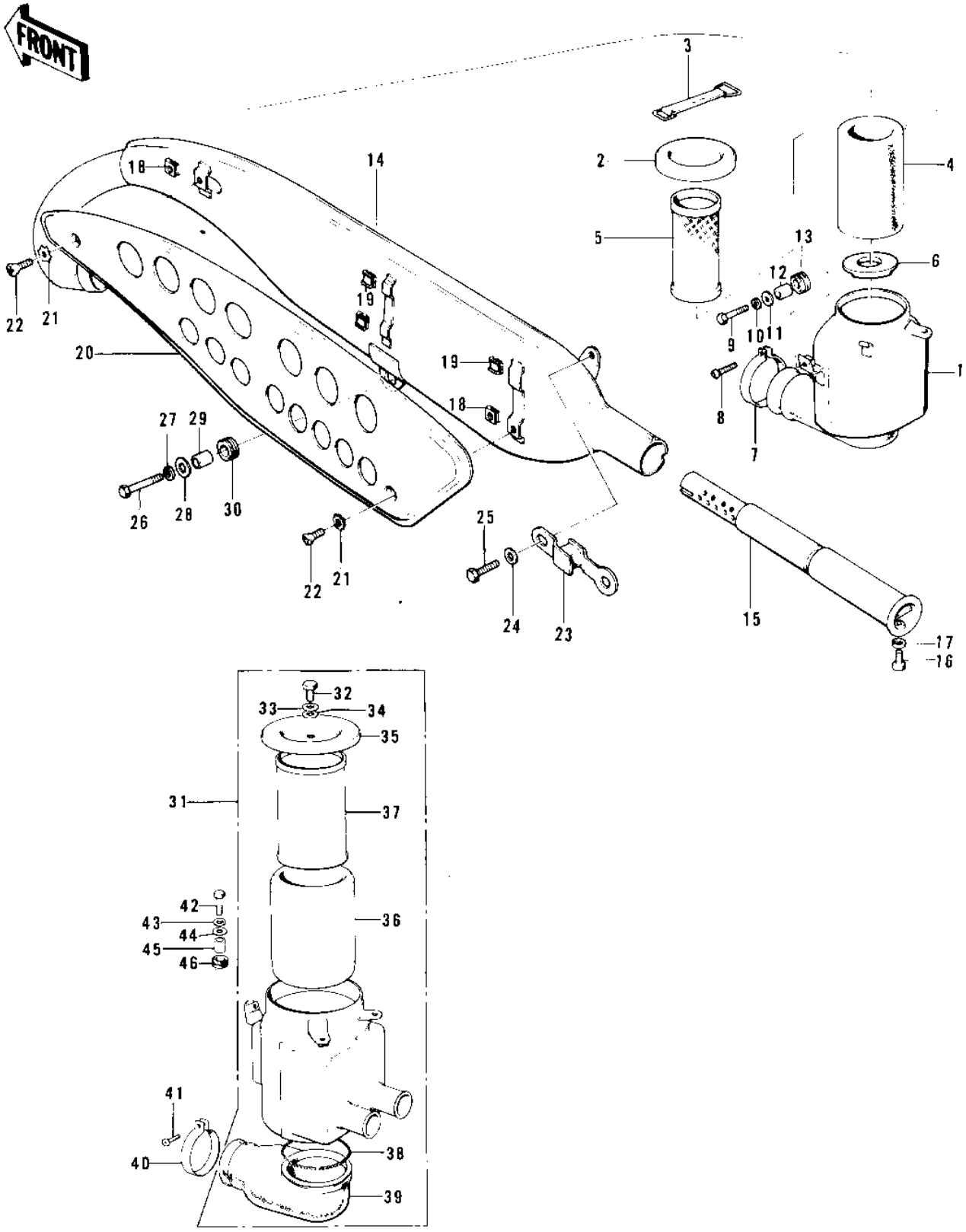

© 2025 Kawasaki Motors Corp., U.S.A.

1973 F11M PARTS LIST

AIR CLEANER/MUFFLER ('73-'75 F11/F11-A/F

ITEM NAME	PART NUMBER	QUANTITY
AIR CLEANER ASSY,BLACK (Ref # 1~6)	11010-056-10	
CAP, AIR CLEANER (Ref # 2)	11012-027-10	
BAND-AIRCLEANER CAP (Ref # 3)	92072-043	
ELEMENT,AIR,CLNR (Ref # 4)	11013-047	
WIRE NET-AIR CLEANER (Ref # 5)	11014-006	
HOLDER-AIR INLET PIP (Ref # 6)	16065-016	
CLAMP-INLET PIPE (Ref # 7,8)	92037-061	
SCREW-PAN-CROS (Ref # 8)	220B0535	
BOLT 6X22 (Ref # 9)	112B0622	
BOLT 6X22 (Ref # 9)	112B0622	
WASHER SPRING 6MM (Ref # 10)	461F0600	
WASHER 6.5X20X1.6T (Ref # 11)	92022-125	
COLLAR,6.8X10X8.5 (Ref # 12)	92027-129	
DAMPER RUBBER (Ref # 13)	92075-076	
MUFFLER ASSY.F-BLACK (Ref # 14~17)	18001-125-21	
BAFFLE TUBE (Ref # 15)	18033-065	
BOLT-UPSET,6X12 (Ref # 16)	112G0612	
BOLT-UPSET,6X12 (Ref # 16)	112G0612	
WASHER SPRING 6MM (Ref # 17)	461F0600	
INSULATOR-HEAT (Ref # 18)	18065-009	
INSULATOR (Ref # 19)	18065-007	
COVER-MUFFLER (Ref # 20)	18064-008	
WASHER LOCK 6MM (Ref # 21)	463H0600	
SCREW PAN HEAD 6X12 (Ref # 22)	220E0612	
BRACKET-MUFFLER (Ref # 23)	18061-038	
WASHER PLAIN 6MM (Ref # 24)	411B0600	
BOLT-UPSET,6X16 (Ref # 25)	112G0616	
BOLT-SMALL-UPSET,8X3 (Ref # 26)	115G0830	
WASHER SPRING 8MM (Ref # 27)	461F0800	

© 2025 Kawasaki Motors Corp., U.S.A.

1973 F11M PARTS LIST

AIR CLEANER/MUFFLER ('73-'75 F11/F11-A/F

ITEM NAME	PART NUMBER	QUANTITY
WASHER FUEL TANK FIT (Ref # 28)	92022-035	
COLLAR (Ref # 29)	92027-102	
DAMPER RUBBER-MUFFLE (Ref # 30)	18063-005	
AIR CLEANER ASY,BLAC (Ref # 31)	11010-080-10	
BOLT,HEX HEAD,6X14 (Ref # 32)	92001-121	
WASHER SPRING 6MM (Ref # 33)	461F0600	
WASHER PLAIN 6MM (Ref # 34)	410B0600	
CAP,AIR CLEANER (Ref # 35)	11012-046	
ELEMENT,AIR,CLNR (Ref # 36)	11013-047	
WIRE NET-AIR CLEANER (Ref # 37)	11014-006	
SPRING,COIL (Ref # 38)	92081-063	
PIPE,AIR INLET (Ref # 39)	11015-045	
CLAMP-INLET PIPE (Ref # 40)	92037-061	
SCREW-PAN-CROS (Ref # 41)	220B0535	
BOLT 6X22 (Ref # 42)	112B0622	
WASHER SPRING 6MM (Ref # 43)	461F0600	
WASHER 6.5X20X1.6T (Ref # 44)	92022-125	
COLLAR,6.8X10X8.5 (Ref # 45)	92027-129	
DAMPER RUBBER (Ref # 46)	92075-076	

© 2025 Kawasaki Motors Corp., U.S.A.