1973 F11M PARTS DIAGRAM

ENGINE COVERS ('73-'75 F11/F11-A/F11-B)

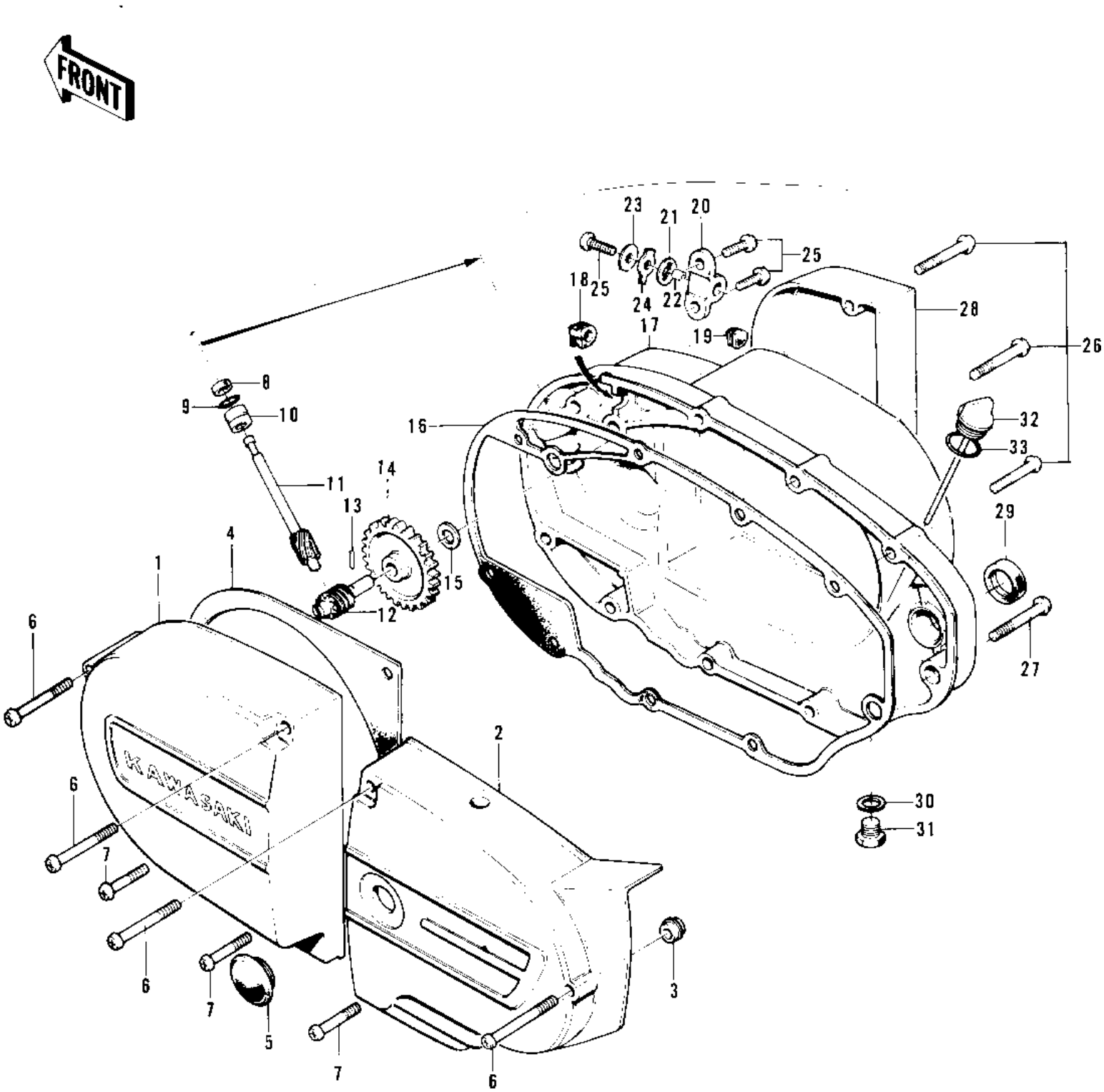

© 2025 Kawasaki Motors Corp., U.S.A.

1973 F11M PARTS LIST

ENGINE COVERS ('73-'75 F11/F11-A/F11-B)

ITEM NAME	PART NUMBER	QUANTITY
COVER-L.H ENG,BLACK (Ref # 1)	14031-048-21	
COVER,L.H ENGINE,BAR (Ref # 1)	14031-048-2H	
COVER-CHAIN CASE,BLK (Ref # 2)	14026-027-21	
COVER,CHAIN CASE,BAR (Ref # 2)	14026-027-2H	
TENSIONER-CHAIN (Ref # 3)	13123-005	
GASKET-L.H ENGINE CO (Ref # 4)	14045-013	
CAP-CLUTCH HOLE (Ref # 5)	14040-003	
SCREW PAN HEAD 6X60 (Ref # 6)	220B0660	
SCREW PAN HEAD 6X25 (Ref # 7)	220B0625	
OIL SEAL (Ref # 8)	92054-004	
"0" RING (Ref # 9)	92055-025	
BUSH-TACHOMETER GEAR (Ref # 10)	92028-095	
GEAR-TACHOMETER (Ref # 11)	13223-005	
PINION-TACHOMETER (Ref # 12)	13224-009	
PIN,DOWEL (Ref # 13)	92042-035	
GEAR-OIL PUMP (Ref # 14)	16085-018	
WASHER THRUST (Ref # 15)	92026-025	
GASKET-R.H ENGINE CO (Ref # 16)	14046-022	
COVER-R.H ENG,BLACK (Ref # 17)	14032-070-21	
COVER,R.H ENGINE,BAR (Ref # 17)	14032-103-2H	
GROMMET WIRING HARN (Ref # 18)	21017-002	
GROMMET (Ref # 19)	92071-063	
HOLDER-OIL PUMP WIRE (Ref # 20)	14044-007	
HOLDER-OIL PUMP WIRE (Ref # 21)	14044-008	
COLLAR (Ref # 22)	92027-164	
WASHER-LOCK (Ref # 23)	92024-045	
WASHER 6.5X20X1.6T (Ref # 24)	92022-125	
SCREW PAN HEAD 6X16 (Ref # 25)	220B0616	
SCREW PAN HEAD 6X35 (Ref # 26)	220B0635	

© 2025 Kawasaki Motors Corp., U.S.A.

1973 F11M PARTS LIST

ENGINE COVERS ('73-'75 F11/F11-A/F11-B)

ITEM NAME	PART NUMBER	QUANTITY
SCREW PAN HEAD 6X45 (Ref # 27)	220B0645	
COVER-OIL PUMP,BLACK (Ref # 28)	14030-035-21	
COVER,OIL PUMP,BARRE (Ref # 28)	14030-035-2H	
OIL SEAL SB20285 (Ref # 29)	92049-012	
GASKET CHECK VALVE (Ref # 30)	92065-058	
PLUG OIL DRAIN (Ref # 31)	92067-001	
PLUG-OIL FILLER (Ref # 32)	16115-014	
PLUG-OIL FILLER (Ref # 32)	16115-017	
"0" RING,20MM (Ref # 33)	670B2020	

© 2025 Kawasaki Motors Corp., U.S.A.