1973 F11M PARTS DIAGRAM

TRANSMISSION/CHANGE DRUM ('73-'75 F11/F1

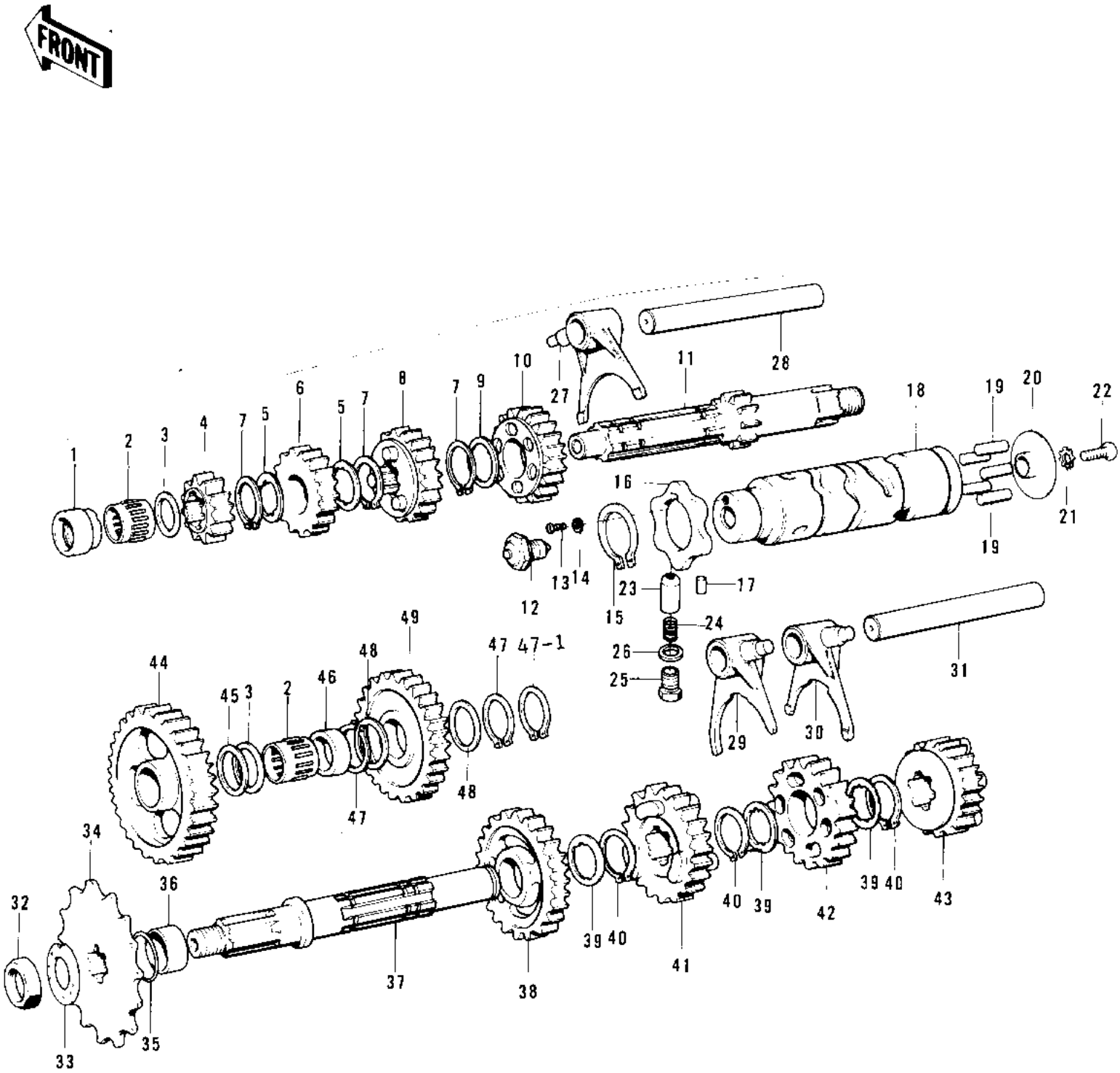

© 2025 Kawasaki Motors Corp., U.S.A.

1973 F11M PARTS LIST

TRANSMISSION/CHANGE DRUM ('73-'75 F11/F1

ITEM NAME	PART NUMBER	QUANTITY
BUSHING (Ref # 1)	92028-109	
BEARING-NEEDLE (Ref # 2)	92046-1184	
WASHER 17MM (Ref # 3)	92022-075	
2ND GEAR-DRIVE SHAFT (Ref # 4)	13130-029	
2ND GEAR,DRIVE SHAFT (Ref # 4)	13130-031	
WASHER-LOCK (Ref # 5)	92024-039	
TOP GEAR-DRIVE SHAFT (Ref # 6)	13136-039	
CIRCLIP,25MM (Ref # 7)	92033-025	
3RD GEAR-DRIVE SHAFT (Ref # 8)	13132-031	
WASHER-PLAIN (Ref # 9)	92022-198	
4TH GEAR-DRIVE SHAFT (Ref # 10)	13134-014	
SHAFT-DRIVE (Ref # 11)	13127-037	
SHAFT,DRIVE (Ref # 11)	13127-040	
SWITCH,NEUTRAL (Ref # 12)	13151-018	
SCREW,PAN HEAD,4X6 (Ref # 13)	92009-006	
SCREW PAN HEAD 4X6 (Ref # 13)	211B0406A	
WASHER SPRING 4MM (Ref # 14)	461F0400	
CIRCLIP,30MM (Ref # 15)	480J3000	
CAM-CHANGE DRUM (Ref # 16)	13145-1058	
PIN-DOWEL,4X6 (Ref # 17)	610A0406	
DRUM ASSY-GEAR CHANG (Ref # 18~22)	13239-012	
PIN GEAR CHANGE DRUM (Ref # 19)	92042-014	
PLATE CHANGE DRUM PI (Ref # 20)	13142-008	
WASHER LOCK 6MM (Ref # 21)	464H0600	
SCREW PAN HEAD 6X12 (Ref # 22)	220B0612	
PIN-NEUTRAL POSITION (Ref # 23)	92043-076	
SPRING (Ref # 24)	92081-112	
BOLT (Ref # 25)	92001-106	
BOLT,10MM (Ref # 25)	92001-131	

© 2025 Kawasaki Motors Corp., U.S.A.

1973 F11M PARTS LIST

TRANSMISSION/CHANGE DRUM ('73-'75 F11/F1

ITEM NAME	PART NUMBER	QUANTITY
GASKET (Ref # 26)	92065-090	
GASKET (Ref # 26)	92065-090	
FORK-SELECTOR,4TH&TO (Ref # 27)	13140-044	
ROD-SHIFT,SHORT (Ref # 28)	13209-008	
FORK-SELECTOR,2ND&3R (Ref # 29)	13140-043	
FORK-SELECTOR,LOW (Ref # 30)	13140-042	
ROD-SHIFT,LONG (Ref # 31)	13209-007	
NUT 18MM (Ref # 32)	92015-019	
WASHER,LOCK,18MM (Ref # 33)	92024-067	
ENG SPROCKET 13T (OP (Ref # 34)	13144-043	
ENGINE SPROCKET 14T (Ref # 34)	13144-017	
ENGINE SPROCKET 15T (Ref # 34)	13144-025	
"O" RING (Ref # 35)	92055-035	
COLLAR-ENG SPROKET (Ref # 36)	92027-163	
SHAFT-OUTPUT (Ref # 37)	13128-033	
2ND GEAR-OUTPUT SHAF (Ref # 38)	13131-035	
2ND GEAR,OUTPUT SHAF (Ref # 38)	13131-037	
WASHER-LOCK (Ref # 39)	92024-038	
CIRCLIP (Ref # 40)	92033-026	
TOP GEAR-OUTPUT SHAF (Ref # 41)	13137-023	
3RD GEAR-OUTPUT SHAF (Ref # 42)	13133-028	
3RD GEAR,OUTPUT SHAF (Ref # 42)	13133-030	
4TH GEAR-OUTPUT SHAF (Ref # 43)	13135-018	
LOW GEAR-OUTPUT SHAF (Ref # 44)	13129-041	
LOW GEAR,OUTPUT SHAF (Ref # 44)	13129-044	
WASHER THRUST (Ref # 45)	92026-021	
BUSHING (Ref # 46)	92028-110	
CIRCLIP 16MM (Ref # 47)	480J1600	
CIRCLIP 16MM (Ref # 47-1)	480J1600	

© 2025 Kawasaki Motors Corp., U.S.A.