1981 KLT200 PARTS DIAGRAM

CARBURETOR (-F/NO. 522924)

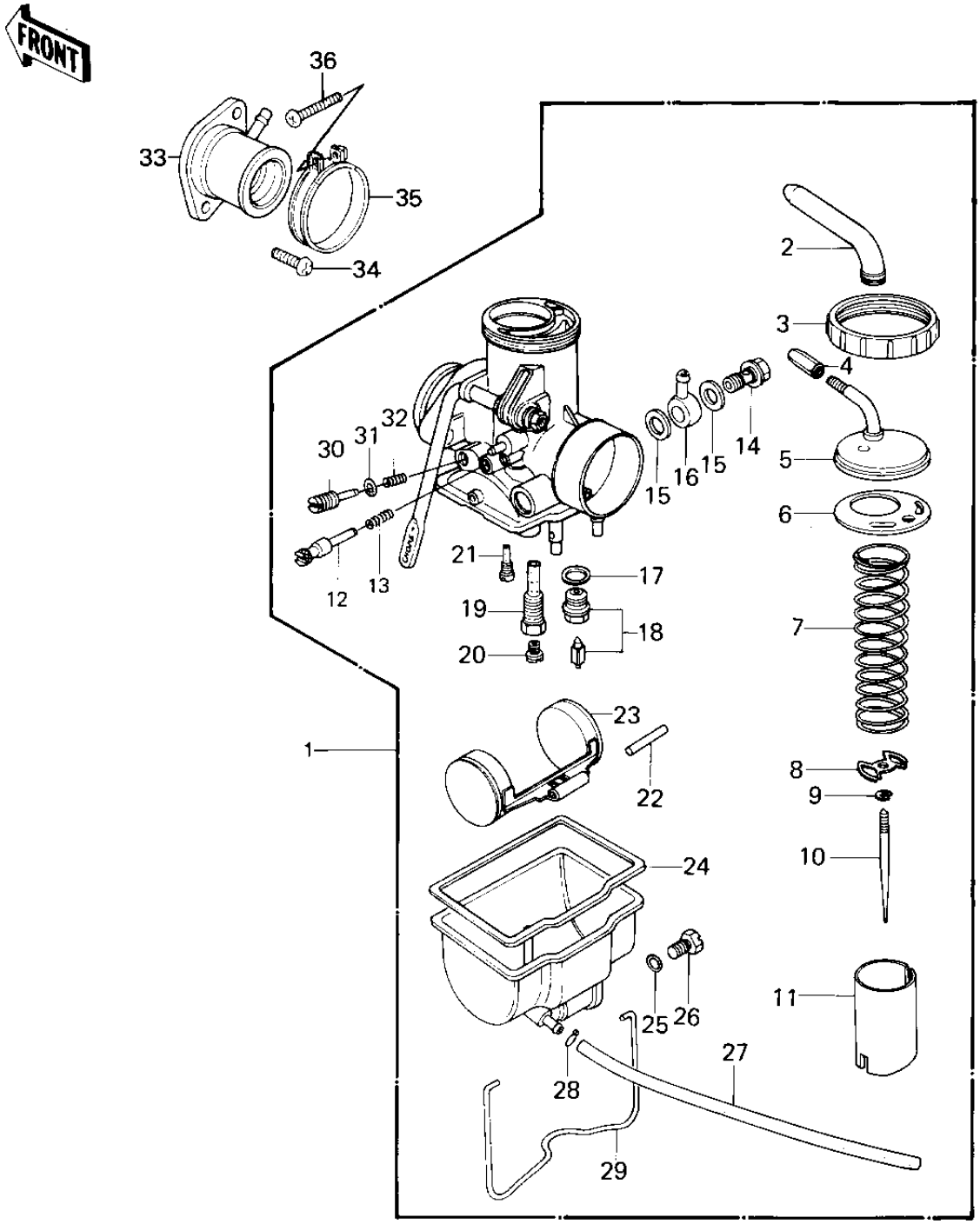

© 2024 Kawasaki Motors Corp., U.S.A.

1981 KLT200 PARTS LIST

CARBURETOR (-F/NO. 522924)

ITEM NAME	PART NUMBER	QUANTITY
CARBURETOR ASSY, (Ref # 1)	16001-1326	1
CAP,CABLE ADJUSTER (Ref # 2)	49006-1007	1
CAP,MIXING CHAMBER (Ref # 3)	16004-1001	1
ADJUSTER,CABLE (Ref # 4)	16002-1002	1
TOP,MIXING CHAMBER (Ref # 5)	16005-1002	1
GASKET,MIXING CHAMBER (Ref # 6)	11009-1026	1
SPRING,THROTTLE (Ref # 7)	92081-1268	1
SEAT,THROTTLE VAL SPR (Ref # 8)	16007-1003	1
CIRCLIP,JET NEEDLE (Ref # 9)	92037-1039	1
JET NEEDLE,N04D (Ref # 10)	16009-1075	1
VALVE,THRR,0.6/1.2 (Ref # 11)	16025-1015	1
SCREW,THROTTLE STOP (Ref # 12)	16021-1004	1
SPRING,THROT STOP SCR (Ref # 13)	92081-1036	1
BOLT,BANJO (Ref # 14)	92001-1413	1
WASHER,PLAIN (Ref # 15)	92022-1021	2
CONNECTOR,BANJO (Ref # 16)	92005-1031	1
GASKET,FLOAT VAV SEAT (Ref # 17)	11009-1027	1
FLOAT VALVE ASSY (Ref # 18)	16030-1014	1
HOLDER,NEEDLE JET (Ref # 19)	16065-1006	1
MAIN JET,#2ND,#98 (Ref # 20)	92063-1005	1
MAIN JET,#92,2ND (Ref # 20)	92063-1004	(1
MAIN JET,2ND,#95 (Ref # 20)	92063-1001	(1
MAIN JET,2ND,#100 (Ref # 20)	92063-1006	(1
MAIN JET,2ND,#102 (Ref # 20)	92063-1090	(1
PILOT JET,#35 (Ref # 21)	92064-1035	1
PIN,FLOAT (Ref # 22)	92043-1011	1
FLOAT (Ref # 23)	16031-1003	1
GASKET,FLOAT CHAMBER (Ref # 24)	11009-1028	1
"O" RING,DRAIN SCREW (Ref # 25)	92055-1003	1

© 2024 Kawasaki Motors Corp., U.S.A.

1981 KLT200 PARTS LIST

CARBURETOR (-F/NO. 522924)

ITEM NAME	PART NUMBER	QUANTITY
SCREW,DRAIN (Ref # 26)	92009-1003	1
HOSE,FUEL OVERFLOW (Ref # 27)	92059-1046	1
CLAMP,TUBE,OVERFLOW (Ref # 28)	92037-1142	1
CLIP,FLOAT CHAMB FITT (Ref # 29)	92037-1041	1
SCREW,PILOT AIR ADJUS (Ref # 30)	16014-1003	1
"O" RING (Ref # 31)	92055-1013	1
SPRING,PILOT AIR ADJ (Ref # 32)	92081-1035	1
HOLDER-CARBURETOR (Ref # 33)	16065-1035	1
SCREW PAN HEAD 6X14 (Ref # 34)	220B0614	2
CLAMP,CARBURETOR HLDR (Ref # 35)	92037-178	1
SCREW-PAN-CROS,5X25 (Ref # 36)	220B0525	1

© 2024 Kawasaki Motors Corp., U.S.A.