1975 KS125-A PARTS DIAGRAM

CYLINDER HEAD/CYLINDER ('74-'75)

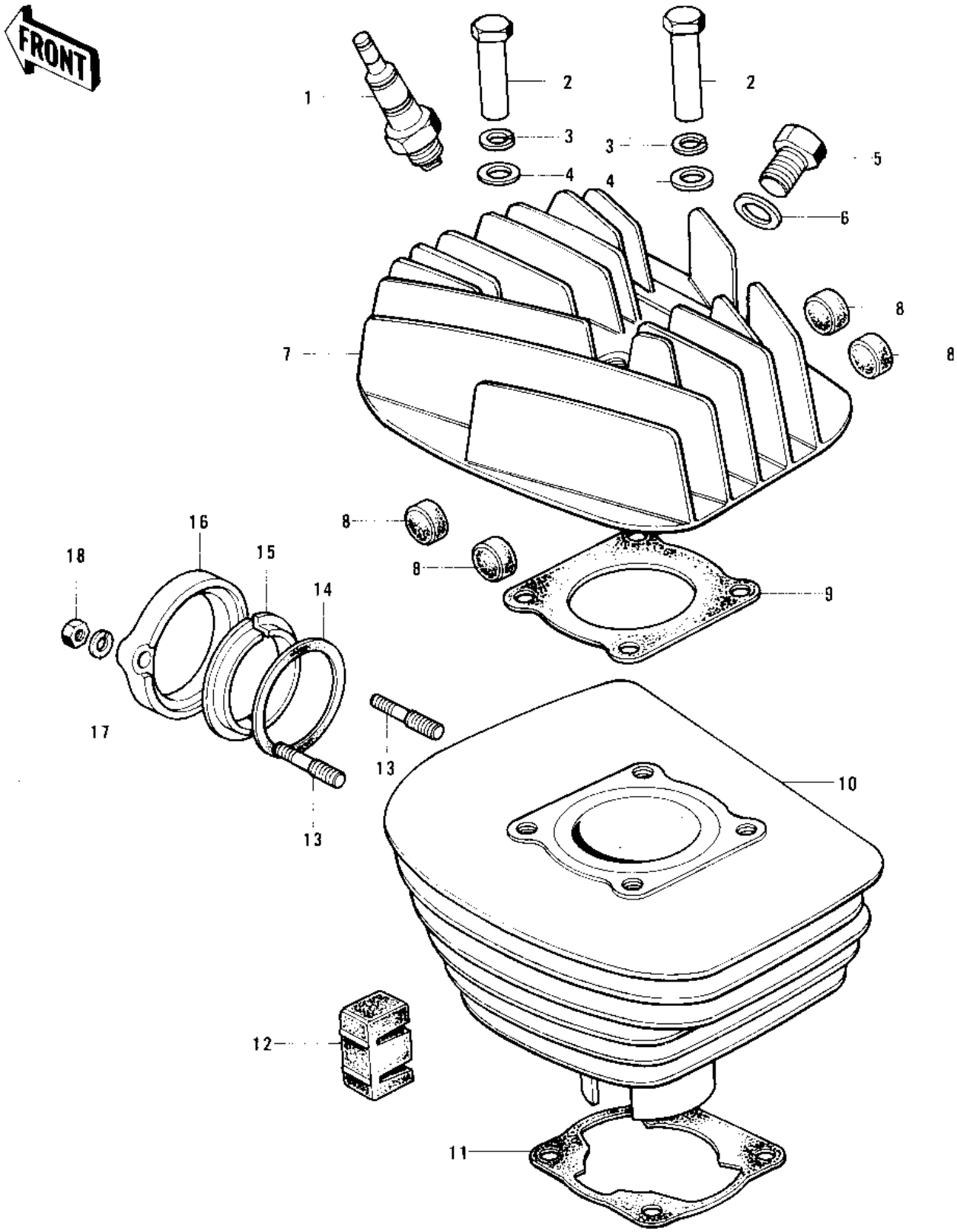

© 2024 Kawasaki Motors Corp., U.S.A.

1975 KS125-A PARTS LIST

CYLINDER HEAD/CYLINDER ('74-'75)

ITEM NAME	PART NUMBER	QUANTITY
SPARK PLUGS B8HC (Ref # 1)	92070-010	1
NUT 8MM (Ref # 2)	92015-020	4
WASHER SPRING 12MM (Ref # 3)	461F1200	4
WASHER PLAIN 12MM (Ref # 4)	92022-072	4
PLUG-CYLINDER HEAD (Ref # 5)	92067-005	1
GASKET-CYL HEAD PLUG (Ref # 6)	92065-068	1
CYLINDER HEAD,BLACK (Ref # 7)	11001-091-21	1
DAMPER RUBBER (Ref # 8)	92075-075	9
GASKET,CYLINDER HEAD (Ref # 9)	11004-064	1
CYLINDER,F.BLACK (Ref # 10)	11005-1030	1
GASKET,CYLINDER BASE (Ref # 11)	11009-037	1
DAMPER RUBBER,CYLNDR (Ref # 12)	92075-247	4
STUD (Ref # 13)	92004-029	2
GASKET EXHAUST PIPE (Ref # 14)	18067-008	1
INSERT,EXHAUST HOLDER (Ref # 15)	18070-007	1
HOLDER,EXHAUST PIPE (Ref # 16)	18069-057	1
WASHER SPRING 6MM (Ref # 17)	461F0600	2
NUT 6MM (Ref # 18)	311B0600	2

© 2024 Kawasaki Motors Corp., U.S.A.