1981 KM100 PARTS DIAGRAM

SWING ARM/SHOCK ABSORBERS

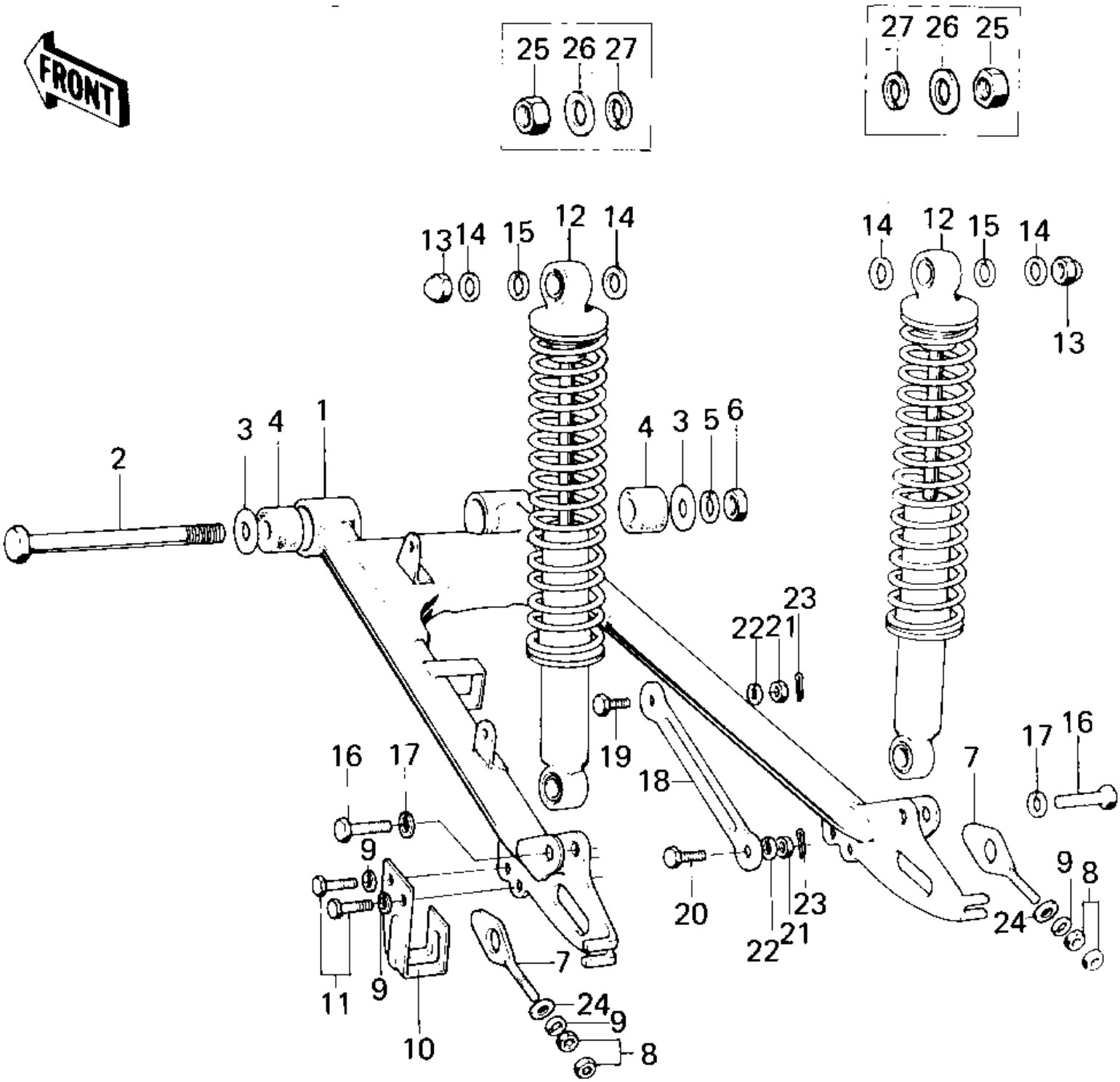

© 2024 Kawasaki Motors Corp., U.S.A.

1981 KM100 PARTS LIST

SWING ARM/SHOCK ABSORBERS

ITEM NAME	PART NUMBER	QUANTITY
ARM,SWINGING (Ref # 1)	33001-055	1
ARM,SWINGING (Ref # 1)	33001-1045	1
SHAFT,SWING ARM PIVOT (Ref # 2)	33032-043	1
WASHER PLAIN 12MM (Ref # 3)	410B1200	2
BUSH SWING ARM SHAFT (Ref # 4)	92092-005	2
WASHER SPRING 12MM (Ref # 5)	461F1200	1
NUT-HEX-FINE (Ref # 6)	314B1200	1
ADJUSTER CHAIN (Ref # 7)	33040-008	2
NUT 6MM (Ref # 8)	311B0600	4
WASHER SPRING 6MM (Ref # 9)	461F0600	4
GUARD,CHAIN (Ref # 10)	55020-012	1
BOLT-UPSET 6X14 (Ref # 11)	112B0614	2
SHOCK ABSBR RR (Ref # 12)	45014-100	2
SHOCK ABSBR RR (Ref # 12)	45014-1019	2
SHOCKABSORBER (Ref # 12)	45014-1214	2
NUT 12MM (Ref # 13)	92020-014	2
WASHER PLAIN 12MM (Ref # 14)	410B1200	4
WASHER SPRING 12MM (Ref # 15)	461F1200	2
BOLT HEX HEAD 10X28 (Ref # 16)	113N1028	2
BOLT-UPSET,10X30 (Ref # 16)	112G1030	2
WASHER SPRING 10MM (Ref # 17)	461F1000	2
TORQUE LINK,RR BRAKE (Ref # 18)	43007-037	1
BOLT TORQUE LINK FIT (Ref # 19)	92003-017	1
BOLT HEX HEAD 10X25 (Ref # 20)	92003-003	1
NUT,10MM (Ref # 21)	314B1000	2
WASHER SPRING 10MM (Ref # 22)	461F1000	2
PIN COTTER 2.0X15 (Ref # 23)	550D2015	2
PIN COTTER (Ref # 23)	92041-005	2
WASHER, PLAIN (Ref # 24)	92022-116	2

© 2024 Kawasaki Motors Corp., U.S.A.