1978 KM100-A3 PARTS DIAGRAM

CARBURETOR (KM100-A6/A7)

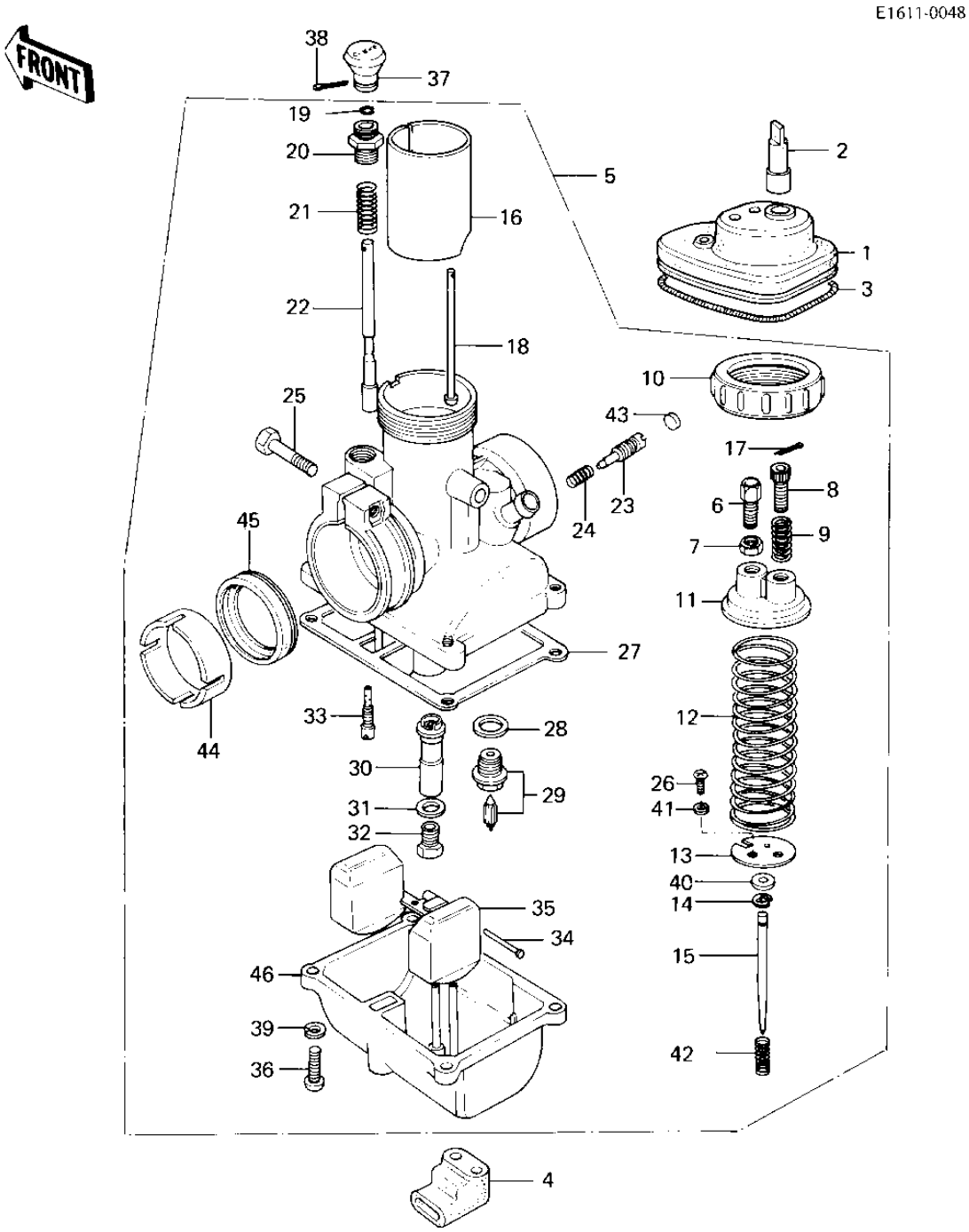

© 2024 Kawasaki Motors Corp., U.S.A.

1978 KM100-A3 PARTS LIST

CARBURETOR (KM100-A6/A7)

ITEM NAME	PART NUMBER	QUANTITY
CAP,CARBURETOR (Ref # 1)	14038-035	
PLUG,CARBURETOR CAP (Ref # 2)	16147-001	
SPRING COIL (Ref # 3)	92081-047	
GROMMET,OVERFLOW (Ref # 4)	92071-1024	
CARBURETOR ASSY (Ref # 5)	16001-1185	
CABLE ADJUSTER (Ref # 6)	16002-1004	
NUT,CABLE ADJSTR LOCK (Ref # 7)	92015-1092	
THROTTLE ADJUSTER (Ref # 8)	16021-1021	
SPRING,THROTTLE ADJST (Ref # 9)	92081-1232	
CAP,MIXING CHAMBER (Ref # 10)	16004-1007	
TOP,MIXING CHAMBER (Ref # 11)	16005-1010	
SPRING,THROTTLE VALVE (Ref # 12)	92081-1234	
SPRING SEAT,THR VALVE (Ref # 13)	13169-1223	
CIRCLIP (Ref # 14)	92037-1167	
JET NEEDLE,#4D21 (Ref # 15)	16009-1043	
VALVE,THROTTLE CA.3.0 (Ref # 16)	16025-1036	
PIN COTTER 1.2X10 (Ref # 17)	550D1210	
ROD,THR VALVE STOP (Ref # 18)	46102-1014	
CLAMP (Ref # 19)	92037-1166	
CAP,STARTER PLUNGER (Ref # 20)	16012-1007	
SPRING,STARTER PLUNGR (Ref # 21)	92081-1233	
PLUNGER,STARTER (Ref # 22)	16016-1010	
SCREW,PILOT AIR ADJST (Ref # 23)	16014-1022	
SPRING,PILOT AIR SCRW (Ref # 24)	92081-1202	
BOLT,CARB MOUNT (Ref # 25)	92001-1304	
SCREW-PAN-HEAD 3X6 (Ref # 26)	220B0306	
GASKET,FLOAT CHAMBER (Ref # 27)	11009-1174	
GASKET,FLOAT VALVE (Ref # 28)	11009-1160	
FLOAT VALVE ASSY (Ref # 29)	16031-1010	

© 2024 Kawasaki Motors Corp., U.S.A.

1978 KM100-A3 PARTS LIST

CARBURETOR (KM100-A6/A7)

ITEM NAME	PART NUMBER	QUANTITY
NEEDLE JET,#80 (Ref # 30)	16017-1043	
WASHER,PLAIN (Ref # 31)	92022-1167	
MAIN JET,#82 (Ref # 32)	92063-1045	
MAIN JET,#80 (Ref # 32)	92063-1065	
MAIN JET,#84 (Ref # 32)	92063-1066	
PILOT JET,#38 (Ref # 33)	92064-1027	
PIN (Ref # 34)	92043-1066	
FLOAT (Ref # 35)	16031-1009	
SCREW-PAN-CROS (Ref # 36)	220B0414	
KNOB,CARBURETOR (Ref # 37)	92077-022	
PIN COTTER 1.6X15 (Ref # 38)	550D1615	
WASHER SPRING 4MM (Ref # 39)	461F0400	
RING,JET NEEDLE (Ref # 40)	92027-1236	
WASHER SPRING 3MM (Ref # 41)	461F0300	
SPRING, JET NEEDLE (Ref # 42)	92081-1203	
PLUG,PILOT SCREW (Ref # 43)	92066-1051	
INSULATOR,CARBURETOR (Ref # 44)	16073-1010	
SEAL,INSULATOR (Ref # 45)	92093-1060	

© 2024 Kawasaki Motors Corp., U.S.A.