1980 KE100 PARTS DIAGRAM

CRANKCASE (KE100-A5/A6)

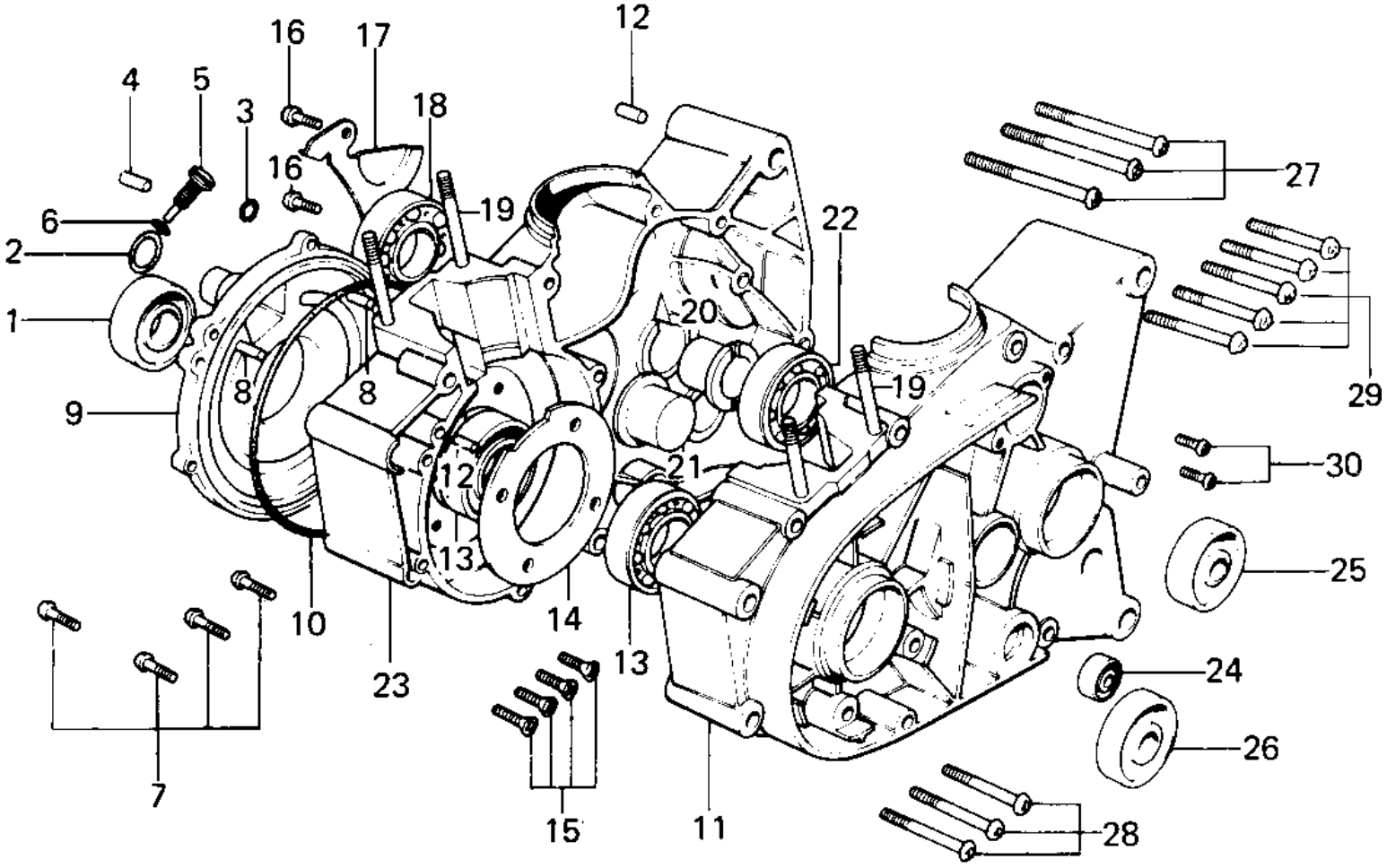

© 2026 Kawasaki Motors Corp., U.S.A.

1980 KE100 PARTS LIST

CRANKCASE (KE100-A5/A6)

ITEM NAME	PART NUMBER	QUANTITY
SEAL-OIL (Ref # 1)	92049-1250	
"0" RING,26MM (Ref # 2)	670B3026	
"0" RING,8MM (Ref # 3)	92055-029	
PIN DOWEL 8X16 (Ref # 4)	92042-017	
NOZZLE OIL INJECTION (Ref # 5)	92062-004	
"0" RING,5MM (Ref # 6)	92055-011	
SCREW PAN HEAD 6X20 (Ref # 7)	220B0620	
PIN DOWEL 5X12 (Ref # 8)	610A0512	
COVER ROTARY DISC VLV (Ref # 9)	14019-032	
COVER,ROTRY DISC VALV (Ref # 9)	14019-056	
"0" RING,100MM (Ref # 10)	92055-010	
CRANKCASE,L.H,BLACK (Ref # 11)	14002-090-21	
PIN, DOWEL, 8X16 (Ref # 12)	551A0816	
BEARING BALL #6204 (Ref # 13)	601B6204	
HOLDER CRANKSHAFT BRG (Ref # 14)	14014-017	
SCREW CNTSNK HD 6X16 (Ref # 15)	221B0616	
SCREW PAN HEAD 6X12 (Ref # 16)	220B0612	
HOLDER BEARING MSSON (Ref # 17)	14014-008	
BEARING BALL #6005 (Ref # 18)	601B6005	
STUD 6X115 (Ref # 19)	172G06115	
BUSH DRIVE SHAFT (Ref # 20)	92028-069	
BUSH OUTPUT SHAFT (Ref # 21)	92028-025	
BEARING BALL #6004 (Ref # 22)	601B6004	
CRANKCASE,R.H F.BLACK (Ref # 23)	14003-063-21	
OIL SEAL SB12205 (Ref # 24)	92049-004	
OIL SEAL SC25376 (Ref # 25)	92050-013	
SEAL-OIL (Ref # 26)	92049-1240	
SCREW PAN HEAD 6X65 (Ref # 27)	220B0665	
SCREW PAN HEAD 6X60 (Ref # 28)	220B0660	

© 2026 Kawasaki Motors Corp., U.S.A.

1980 KE100 PARTS LIST

CRANKCASE (KE100-A5/A6)

ITEM NAME	PART NUMBER	QUANTITY
SCREW PAN HEAD 6X40 (Ref # 29)	220B0640	
SCREW PAN HEAD 6X25 (Ref # 30)	220B0625	

© 2026 Kawasaki Motors Corp., U.S.A.