1975 G5-C PARTS DIAGRAM

CRANKSHAFT/PISTON/ROTARY VALVE ('74-'75

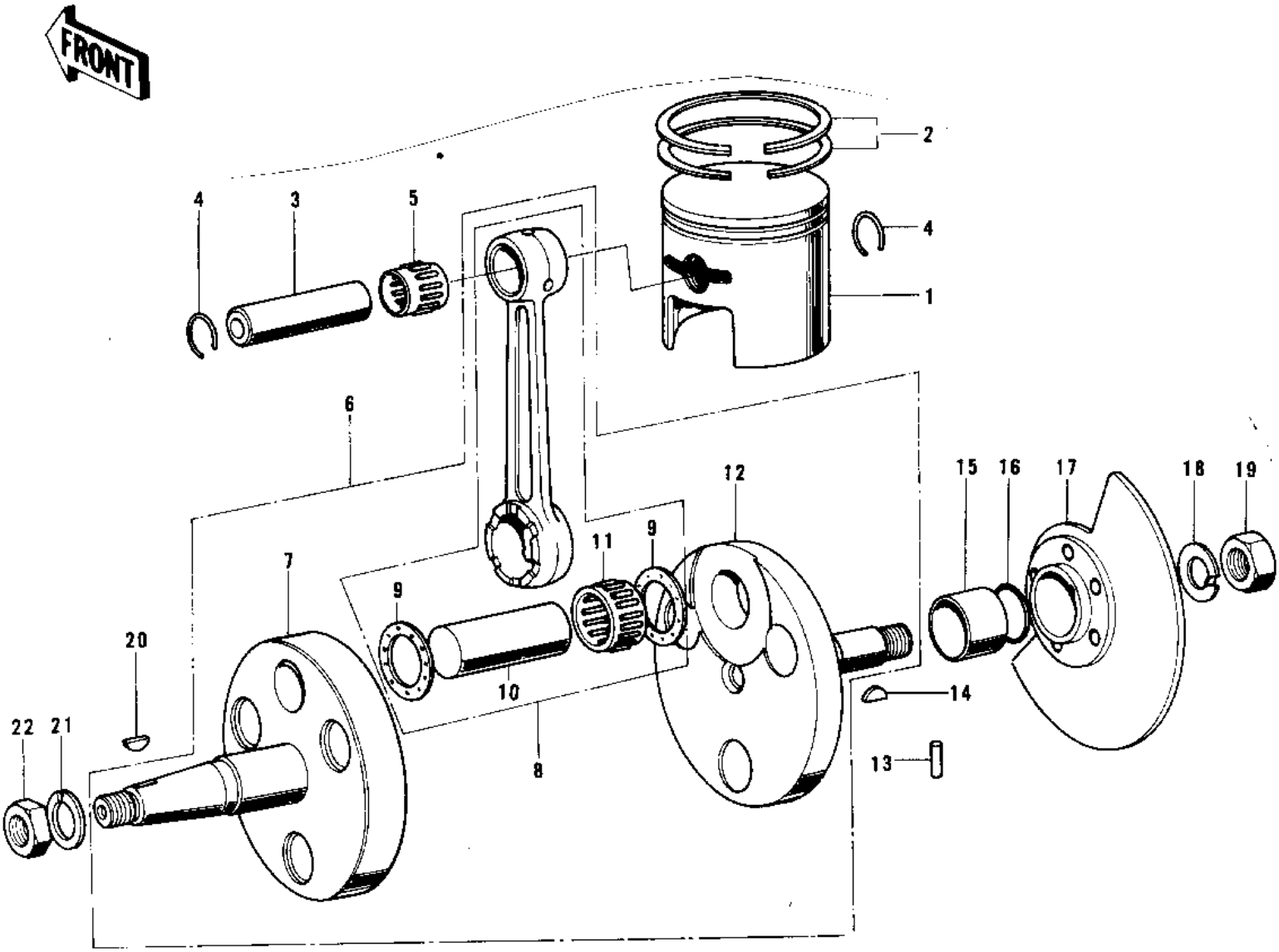

© 2026 Kawasaki Motors Corp., U.S.A.

1975 G5-C PARTS LIST

CRANKSHAFT/PISTON/ROTARY VALVE ('74-'75

ITEM NAME	PART NUMBER	QUANTITY
PISTON,STD (Ref # 1)	13001-057	
PISTON.0.020 O.S (Ref # 1)	13029-059	
PISTON,0.040 O-S (Ref # 1)	13027-057	
RING SET,STD (Ref # 2)	13008-043	
RING NET,0.020 O.S (Ref # 2)	13025-047	
RING NET,0.040 O.S (Ref # 2)	13024-050	
PIN-PISTON (Ref # 3)	13002-003	
CIRCLIP PISTON PIN (Ref # 4)	92036-003	
BEARING,SMALL END (Ref # 5)	13033-030	
CRANK&CONROD ASSY (Ref # 6)	13036-043	
CRANKSHAFT,L.H (Ref # 7)	13037-053	
CONNECTING ROD SET (Ref # 8)	13044-5015	
WASHER-SIDE (Ref # 9)	92025-047	
CRANK PIN (Ref # 10)	13035-025	
BEARING,BIG END (Ref # 11)	13034-034	
CRANK SHAFT,R.H (Ref # 12)	13038-049	
PIN DOWEL 4X10 (Ref # 13)	610A0410	
WOODRUFF KEY PRY PINI (Ref # 14)	92038-003	
COLLAR CRANKSHAFT (Ref # 15)	92027-022	
"0" RING,16MM (Ref # 16)	670B2016	
VALVE ROTARY DISC (Ref # 17)	12001-004	
WASHER LOCK 12MM (Ref # 18)	92024-003	
NUT 12MM (Ref # 19)	92015-006	
WOODRUFF KEY (Ref # 20)	510A3200	
WASHER SPRING 10MM (Ref # 21)	461F1000	
NUT,10MM (Ref # 22)	314B1000	

© 2026 Kawasaki Motors Corp., U.S.A.