1973 G5-A PARTS DIAGRAM

CRANKCASE ('72-'73 G5-A)

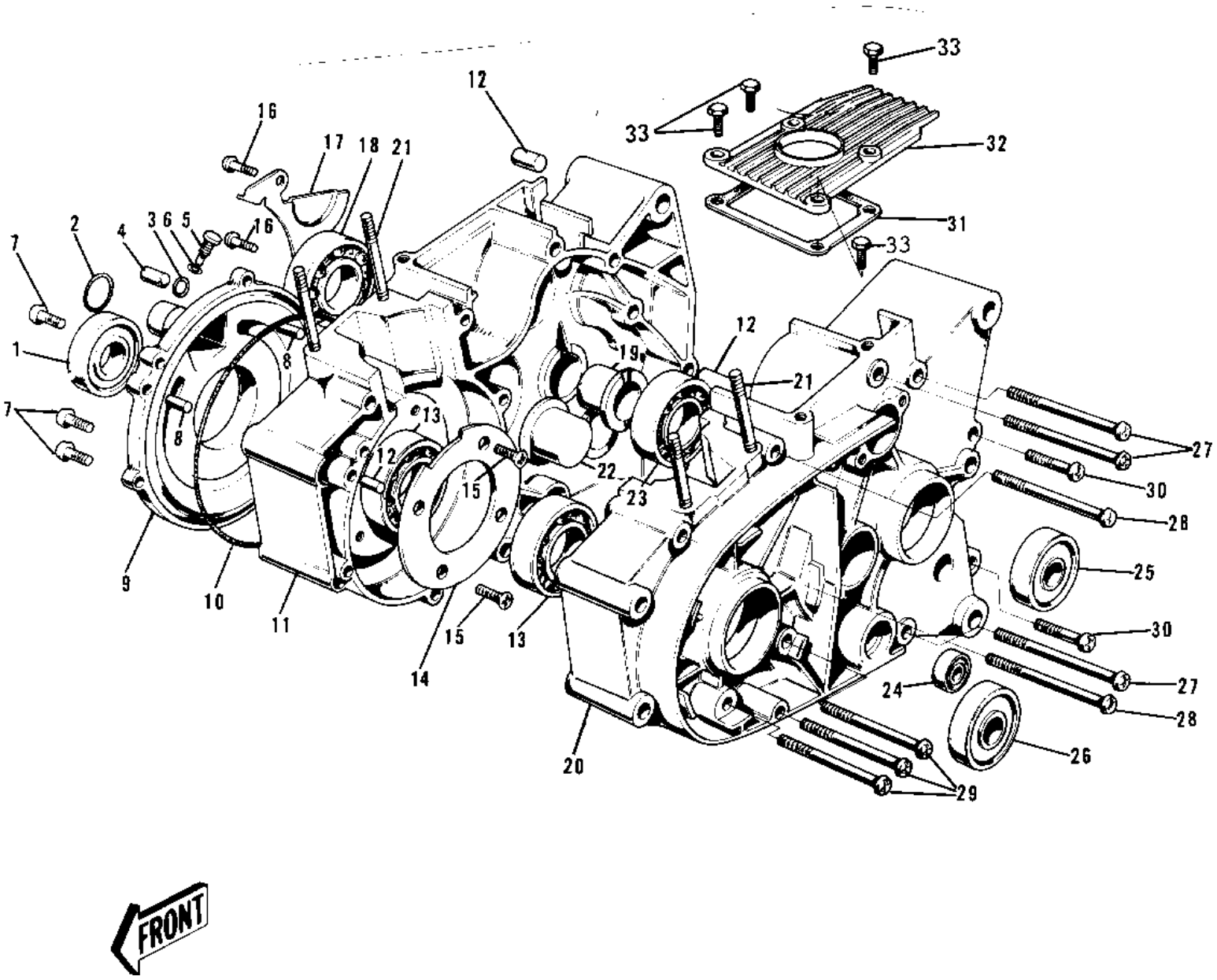

© 2024 Kawasaki Motors Corp., U.S.A.

1973 G5-A PARTS LIST

CRANKCASE ('72-'73 G5-A)

ITEM NAME	PART NUMBER	QUANTITY

© 2024 Kawasaki Motors Corp., U.S.A.