1974 G5-B PARTS DIAGRAM

CYLINDER HEAD/CYLINDER ('72-'73 G5-A)

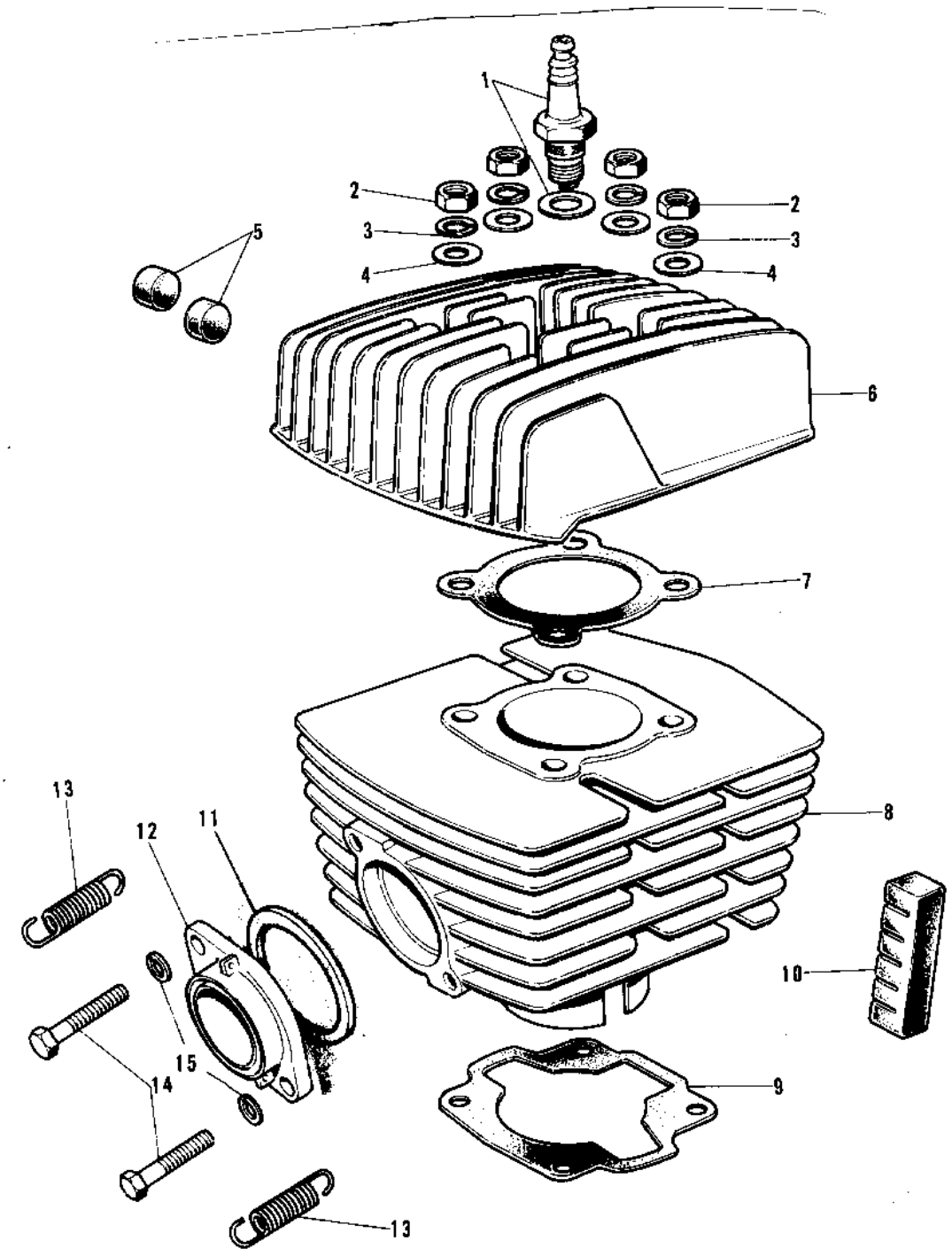

© 2024 Kawasaki Motors Corp., U.S.A.

1974 G5-B PARTS LIST

CYLINDER HEAD/CYLINDER ('72-'73 G5-A)

ITEM NAME	PART NUMBER	QUANTITY
SPARK PLUGS B8HC (Ref # 1)	92070-010	
NUT,8MM (Ref # 2)	311B0800	
WASHER SPRING 8MM (Ref # 3)	461F0800	
WASHER PLAIN 8MM (Ref # 4)	410B0800	
DAMPER RUBBER (Ref # 5)	92075-074	
CYLINDER HEAD (Ref # 6)	11001-015	
CYLINDER HEAD (Ref # 6)	11001-015	
GASKET CYLINDER HEAD (Ref # 7)	11004-033	
CYLINDER (Ref # 8)	11005-075	
GASKET CYLINDER BASE (Ref # 9)	11009-009	
DAMPER RUBBER (Ref # 10)	92075-073	
GASKET,EXHAUST PIPE (Ref # 11)	11009-1992	
HOLDER-EXHAUST PIPE (Ref # 12)	18069-034	
SPRING CONNECTOR (Ref # 13)	18071-001	
BOLT-UPSET,6X20 (Ref # 14)	112G0620	
WASHER SPRING 6MM (Ref # 15)	461F0600	

© 2024 Kawasaki Motors Corp., U.S.A.