1976 KV100-A7 PARTS DIAGRAM

REAR HUB/BRAKE/CHAIN ('74-'75)

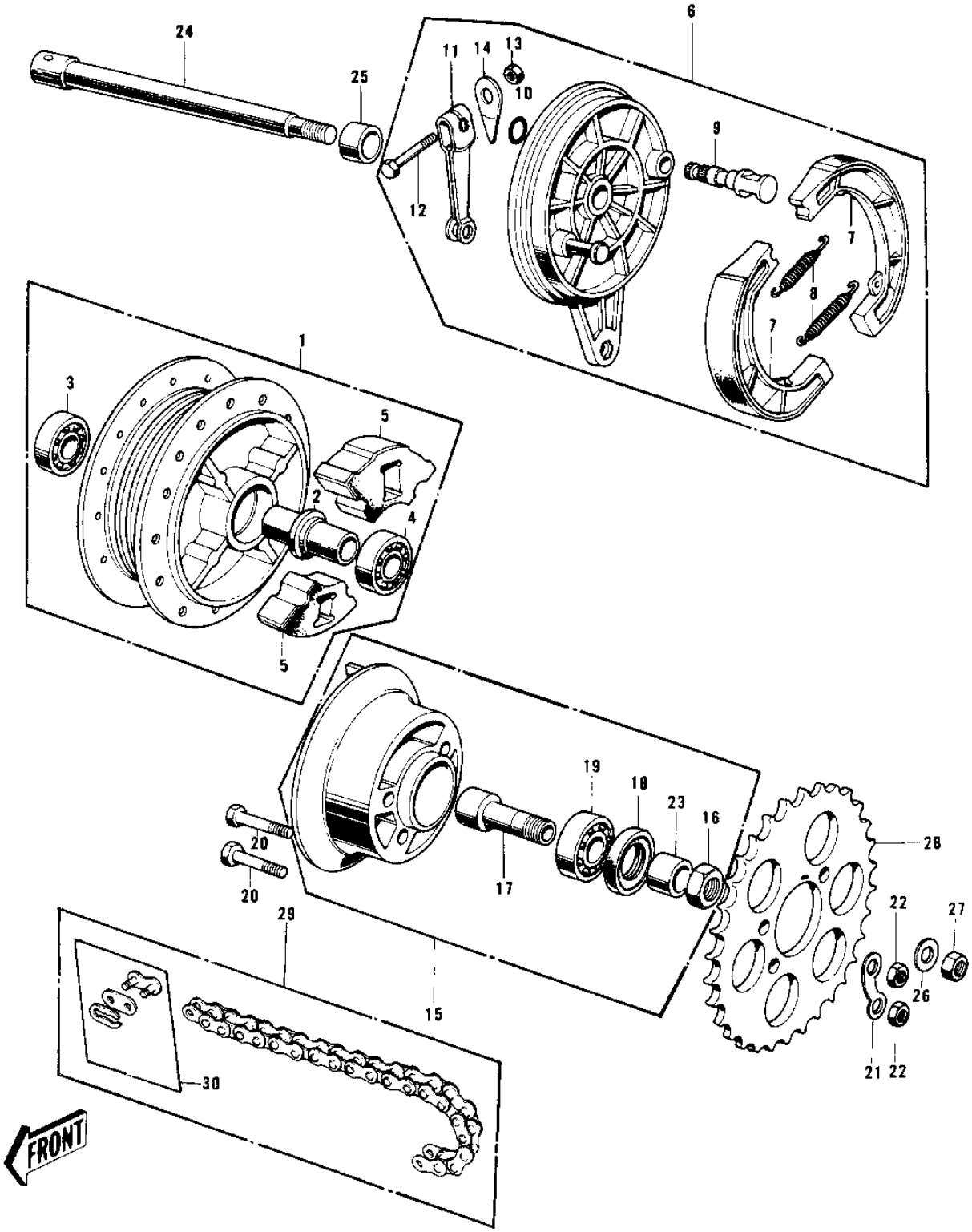

© 2024 Kawasaki Motors Corp., U.S.A.

1976 KV100-A7 PARTS LIST

REAR HUB/BRAKE/CHAIN ('74-'75)

ITEM NAME	PART NUMBER	QUANTITY
DRUM ASSY,RR BRK,BUFF (Ref # 1)	42005-031-80	1
SPACER-RR HUB BEARING (Ref # 2)	42010-005	1
BEARING BALL #6201 (Ref # 3)	601B6201	1
BEARING BALL #6301Z (Ref # 4)	601B6301Z	1
DAMPER REAR HUB SHOCK (Ref # 5)	42014-016	4
PANEL ASSY,RR BRK,BUF (Ref # 6)	42006-041-80	1
PANEL-ASY,RR BRK,BUFF (Ref # 6)	42006-065-80	1
SHOE-BRAKE (Ref # 7)	41048-1085	2
SPRING,BRAKE SHOE (Ref # 8)	92081-1766	2
CAM SHAFT-FRONT BRAKE (Ref # 9)	41050-018	1
CAM SHAFT,REAR BRAKE (Ref # 9)	42026-018	1
"0" RING,11MM (Ref # 10)	92055-004	1
LEVER,RR BRAKE PANEL (Ref # 11)	42029-029	1
BOLT-UPSET (Ref # 12)	112G0630	1
NUT,6MM (Ref # 13)	41072-007	1
INDICATOR,BKSHOE (Ref # 14)	41085-003	1
COUPLING ASSY RR HUB (Ref # 15)	42033-011	1
NUT,16MM (Ref # 16)	42045-004	1
SLEEVE-RR HUB COUPLNG (Ref # 17)	42036-002	1
OIL SEAL-COUPLING (Ref # 18)	92052-003	1
BEARING BALL #6203 (Ref # 19)	601B6203	1
BOLT REAR SPROCKET (Ref # 20)	92001-082	4
WASHER LOCK (Ref # 21)	92088-011	2
NUT 10MM (Ref # 22)	315B1000	4
BUSH,COUPLNG OIL SEAL (Ref # 23)	42037-003	1
AXLE,12X215 (Ref # 24)	41068-1109	1
COLLAR-REAR HUB R.H (Ref # 25)	42032-002	1
WASHER PLAIN 12MM (Ref # 26)	410B1200	1
WASHER PLAIN 12MM (Ref # 26)	411B1200	1

© 2024 Kawasaki Motors Corp., U.S.A.

1976 KV100-A7 PARTS LIST

REAR HUB/BRAKE/CHAIN ('74-'75)

ITEM NAME	PART NUMBER	QUANTITY
NUT 10MM (Ref # 27)	42045-005	1
REAR SPROCKET 42T (Ref # 28)	42041-076	1
SPROCKET-HUB,40T (Ref # 28)	42041-1095	1
CHAIN,DRIVE,EK428-G (Ref # 29)	92057-1085	1
CHAIN,DRIVE,EK428-G (Ref # 29)	92057-1085	1
JOINT-CHAIN (Ref # 30)	92058-1014	1
JOINT-CHAIN (Ref # 30)	92058-1014	1

© 2024 Kawasaki Motors Corp., U.S.A.