1976 KV100-A7 PARTS DIAGRAM

FRAME/FRAME FITTINGS ('74-'75)

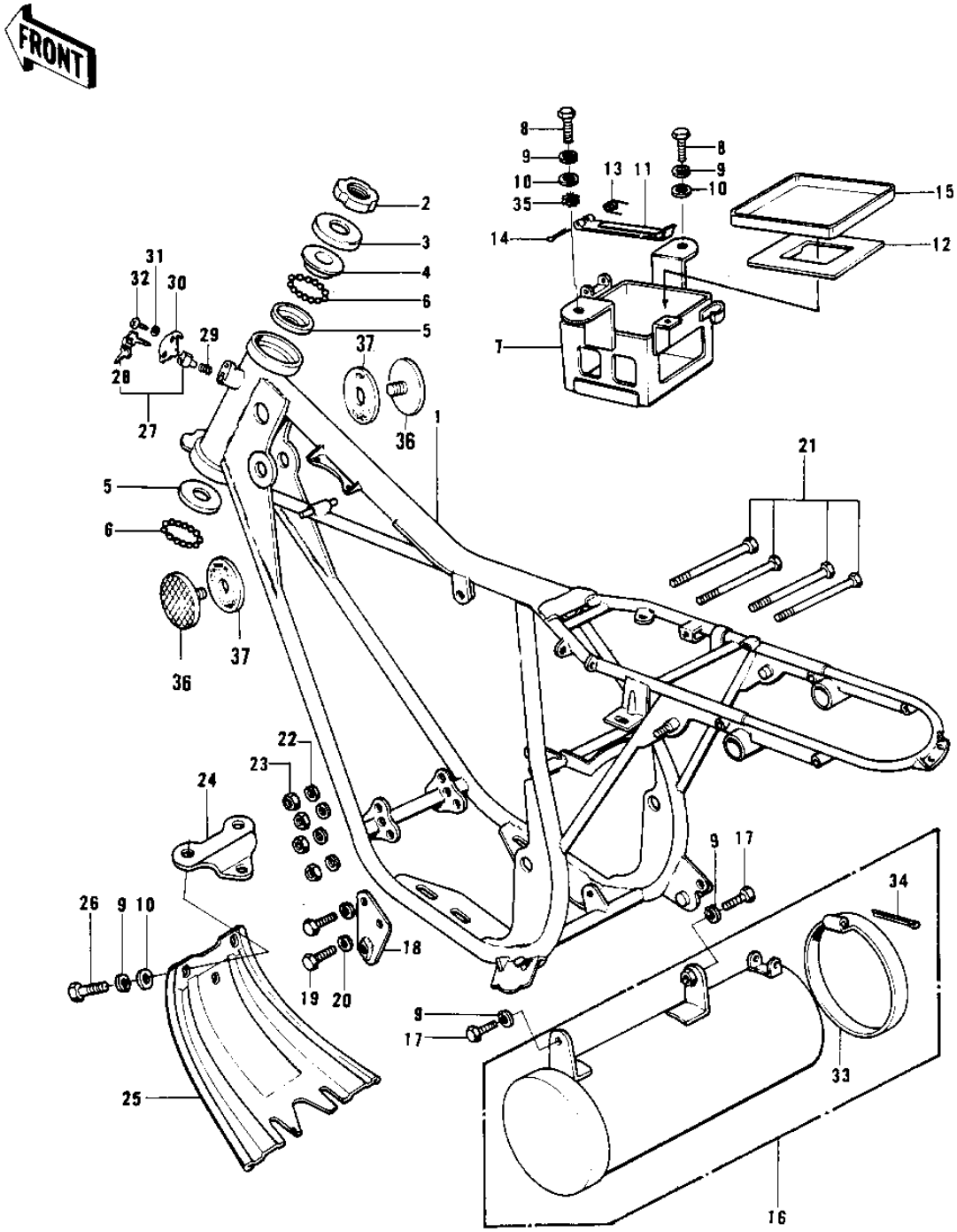

© 2025 Kawasaki Motors Corp., U.S.A.

1976 KV100-A7 PARTS LIST

FRAME/FRAME FITTINGS ('74-'75)

ITEM NAME	PART NUMBER	QUANTITY
FRAME (Ref # 1)	32002-073	1
FRAME (Ref # 1)	32002-111	1
FRAME (Ref # 1)	32002-138	1
NUT STEERING STEM LCK (Ref # 2)	92090-006	1
CAP STEERING STEM (Ref # 3)	46098-004	1
CONE STRNG STEM BERNG (Ref # 4)	92047-006	1
RACE BEARING (Ref # 5)	92048-004	2
BALL STEEL 3/16' (Ref # 6)	600A0600	46
CASE,BATTERY (Ref # 7)	32097-029	1
BOLT-UPSET,6X16 (Ref # 8)	112G0616	2
WASHER SPRING 6MM (Ref # 9)	461F0600	8
WASHER PLAIN 6MM (Ref # 10)	411B0600	8
BAND-BATTERY (Ref # 11)	92072-037	1
MAT-BATTERY (Ref # 12)	32103-024	1
SPRING-RETURN (Ref # 13)	92083-017	1
PIN-COTTER,2.5X35 (Ref # 14)	550D2535	1
MAT-BATTERY (Ref # 15)	32103-018	1
CASE,TOOL (Ref # 16)	32098-021	1
BOLT-UPSET,6X12 (Ref # 17)	112G0612	3
BRACKET,ENGINE MOUNT (Ref # 18)	32029-065	1
BOLT,8X20 (Ref # 19)	115G0820	2
WASHER SPRING 8MM (Ref # 20)	461F0800	2
BOLT,HEX HEAD,10X117 (Ref # 21)	92001-1246	4
WASHER SPRING 10MM (Ref # 22)	461F1000	4
NUT,10MM (Ref # 23)	314B1000	4
BRACKET,ENGINE GUARD (Ref # 24)	55012-003	1
GUARD,ENGINE (Ref # 25)	55011-019	1
BOLT-UPSET 6X14 (Ref # 26)	112B0614	3
LOCK ASSY,STEERING (Ref # 27)	27016-042	1

© 2025 Kawasaki Motors Corp., U.S.A.

1976 KV100-A7 PARTS LIST

FRAME/FRAME FITTINGS ('74-'75)

ITEM NAME	PART NUMBER	QUANTITY
KEY SET,#401 (Ref # 28)	27008-063-01	X
KEY SET,#410 (Ref # 28)	27008-063-10	X
SPRING-STEERING LOCK (Ref # 29)	27032-001	1
CAP,STEERING LOCK (Ref # 30)	11012-1134	1
WASHER (Ref # 31)	92097-003	1
SCREW-TAPPING (Ref # 32)	92008-007	1
CAP-TOOL CASE (Ref # 33)	32099-005	1
PIN COTTER 2.0X30 (Ref # 34)	550D2030	1
WASHER LOCK 6MM (Ref # 35)	464H0600	1
REFLECTOR,REFLEX,REAR (Ref # 36)	28012-009	2
DAMPER RUBBER,REFLECT (Ref # 37)	92094-011	2

© 2025 Kawasaki Motors Corp., U.S.A.